- **Low Supply Voltage . . . 1.8 V to 3.6 V**
- **Very Low Supply Current . . . 20 μA (per channel)**
- **Ultralow Power Shut-Down Mode − $I_{DD(SHDN)}$ = 10 nA/Channel**
- **CMOS Rail-to-Rail Input/Output**
- **Input Common-Mode Voltage Range . . . −0.2 V to V_{DD} + 0.2 V**
- **Input Offset Voltage . . . 550 μV**
- **Wide Bandwidth . . . 500 kHz**
- **Slew Rate . . . 0.20 V/μs**
- **Specified Temperature Range:**
  0°C to 70°C . . . Commercial Grade
  −40°C to 85°C . . . Industrial Grade
- **Ultrasmall Packaging**
  5 or 6 Pin SOT-23 (TLV2760/1)
  8 or 10 Pin MSOP (TLV2762/3)
- **Universal Op-Amp EVM**

Operational Amplifier

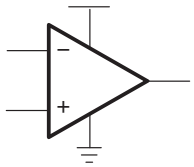

SUPPLY CURRENT
vs
SUPPLY VOLTAGE

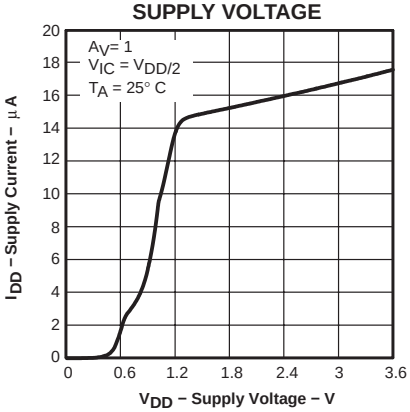

description

The TLV276x single supply operational amplifiers provide 500 kHz bandwidth from only 20 μA while operating down to 1.8 V over the industrial temperature range. The maximum recommended supply voltage is 3.6 V, which allows the devices to be operated from (±1.8 V supplies down to ±0.9 V) two AA or AAA cells. The devices have been characterized at 1.8 V (end of life of 2 AA(A) cells) and at 2.4 V (nominal voltage of 2 NiCd/NiMH cells). The TLV276x have rail-to-rail input and output capability which is a necessity at 1.8 V.

The low supply current is coupled with extremely low input bias currents enabling them to be used with mega-ohm resistors. Low shutdown current of only 10 nA make these devices ideal for low frequency measurement applications desiring long active battery life.

All members are available in PDIP and SOIC with the singles in the small SOT-23 package, duals in the MSOP, and quads in the TSSOP package.

SELECTION OF SINGLE SUPPLY AMPLIFIER PRODUCTS

DEVICE	V_{DD} (V)	V_{IO} (μV)	I_{DD}/Ch (μA)	I_{IB} (pA)	GBW (MHz)	SR (V/μs)	Vn,1kHz (nV/√Hz)	I_O (mA)	SHUT-DOWN	RAIL-TO-RAIL
TLV224x	2.5 − 12	600	1	100	0.0055	0.002	NA	0.2	—	I/O
TLV2211	2.7 − 10	450	13	1	0.065	0.025	21	0.4	—	O
TLV276x	1.8 − 3.6	550	20	3	0.5	0.23	95	5	Y	I/O
TLV245x(A)	2.7 − 6	20	23	500	0.22	0.11	49	2.5	Y	I/O
TLV246x(A)	2.7 − 6	150	550	1300	6.4	1.6	11	25	Y	I/O
TLV278x(A)	1.8 − 3.6	250	650	2.5	8	5	18	10	Y	I/O

Please be aware that an important notice concerning availability, standard warranty, and use in critical applications of Texas Instruments semiconductor products and disclaimers thereto appears at the end of this data sheet.

PRODUCTION DATA information is current as of publication date. Products conform to specifications per the terms of Texas Instruments standard warranty. Production processing does not necessarily include testing of all parameters.

Copyright © 2000−2005, Texas Instruments Incorporated

TLV2760 and TLV2761 AVAILABLE OPTIONS(1)

T_A	V_{IO}max AT 25°C	PACKAGED DEVICES			
		SMALL OUTLINE (D)†	SOT-23		PLASTIC DIP (P)
			(DBV)‡	SYMBOL	
0°C to 70°C	3500 µV	TLV2760CD TLV2761CD	— —	— —	— —
−40°C to 85°C	3500 µV	TLV2760ID TLV2761ID	TLV2760IDBV TLV2761IDBV	VANI VAXI	TLV2760IP TLV2761IP

† This package is available taped and reeled. To order this packaging option, add an **R** suffix to the part number (e.g., TLV2760CDR).
‡ This package is only available taped and reeled. For standard quantities (3,000 pieces per reel), add an **R** suffix (i.e., TLV2760CDBVR). For smaller quantities (250 pieces per mini-reel), add a **T** suffix to the part number (e.g. TLV2760CDBVT).

TLV2762 and TLV2763 AVAILABLE OPTIONS(1)

T_A	V_{IO}max AT 25°C	PACKAGED DEVICES						
		SMALL OUTLINE (D)†	MSOP				PLASTIC DIP (N)	PLASTIC DIP (P)
			DGK†	SYMBOL	DGS†	SYMBOL		
0°C to 70°C	3500 µV	TLV2762CD TLV2763CD	— —	— —	— —	— —	— —	— —
−40°C to 85°C	3500 µV	TLV2762ID TLV2763ID	TLV2762IDGK —	xxTIAJP —	— TLV2763IDGS	— xxTIAJR	— TLV2763IN	TLV2762IP —

† This package is available taped and reeled. To order this packaging option, add an **R** suffix to the part number (e.g., TLV2762CDR).

TLV2764 and TLV2765 AVAILABLE OPTIONS(1)

T_A	V_{IO}max AT 25°C	PACKAGED DEVICES		
		SMALL OUTLINE (D)†	PLASTIC DIP (N)	TSSOP (PW)†
0°C to 70°C	3500 µV	TLV2764CD TLV2765CD	— —	— —
−40°C to 85°C	3500 µV	TLV2764ID TLV2765ID	TLV2764IN TLV2765IN	TLV2764IPW TLV2765IPW

† This package is available taped and reeled. To order this packaging option, add an **R** suffix to the part number (e.g., TLV2764CDR).

1. For the most current package and ordering information, see the Package Option Addendum at the end of this document, or see the TI website at www.ti.com.

TLV276x PACKAGE PINOUTS

TLV2760
DBV PACKAGE
(TOP VIEW)

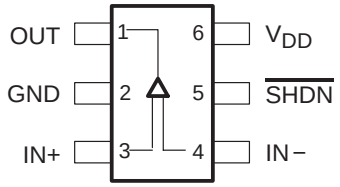

TLV2760
D OR P PACKAGE
(TOP VIEW)

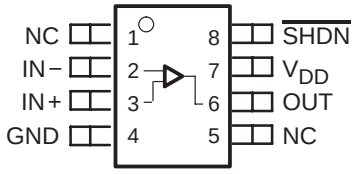

TLV2761
DBV PACKAGE
(TOP VIEW)

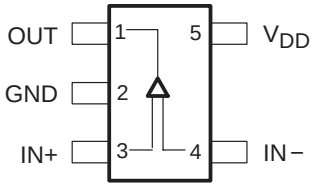

TLV2761
D OR P PACKAGE
(TOP VIEW)

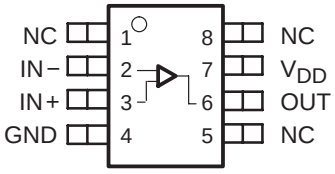

TLV2762
D, DGK, OR P PACKAGE
(TOP VIEW)

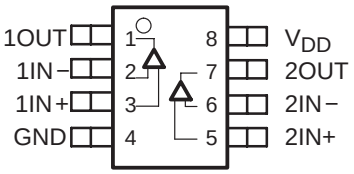

TLV2763
DGS PACKAGE
(TOP VIEW)

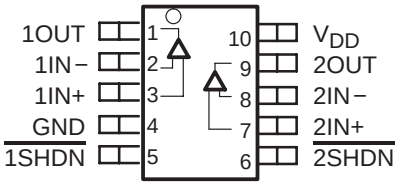

TLV2763
D OR N PACKAGE
(TOP VIEW)

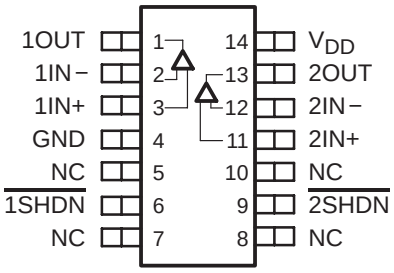

TLV2764
D, N, OR PW PACKAGE
(TOP VIEW)

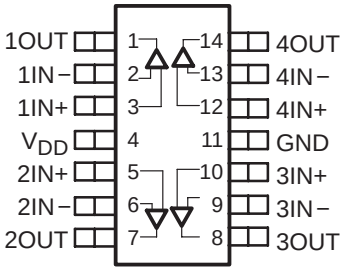

TLV2765
D, N, OR PW PACKAGE
(TOP VIEW)

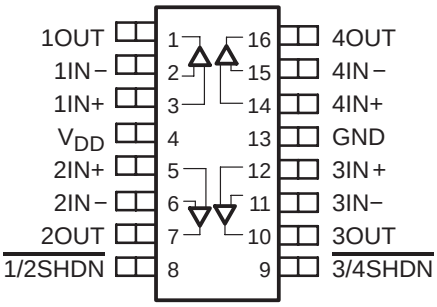

NC − No internal connection

absolute maximum ratings over operating free-air temperature range (unless otherwise noted)†

Supply voltage, V_{DD} (see Note 1) . . . . . 4 V
Differential input voltage range, V_{ID} . . . . . $\pm V_{DD}$
Input current range, I_I . . . . . ±10 mA
Output current range, I_O . . . . . ±10 mA
Continuous total power dissipation . . . . . See Dissipation Rating Table
Operating free-air temperature range, T_A: C-suffix . . . . . 0°C to 70°C
I-suffix . . . . . −40°C to 85°C
Maximum junction temperature, T_J . . . . . 150°C
Storage temperature range, T_{stg} . . . . . −65°C to 150°C
Lead temperature 1,6 mm (1/16 inch) from case for 10 seconds . . . . . 260°C

† Stresses beyond those listed under “absolute maximum ratings” may cause permanent damage to the device. These are stress ratings only, and functional operation of the device at these or any other conditions beyond those indicated under “recommended operating conditions” is not implied. Exposure to absolute-maximum-rated conditions for extended periods may affect device reliability.
NOTE 1: All voltage values, except differential voltages, are with respect to GND

DISSIPATION RATING TABLE

PACKAGE	Θ_{JC} (°C/W)	Θ_{JA} (°C/W)	$T_A \le 25°C$ POWER RATING	$T_A = 85°C$ POWER RATING
D (8)	38.3	176	710 mW	369 mW
D (14)	26.9	122	1022 mW	531 mW
D (16)	25.7	114	1090 mW	567 mW
DBV (5)	55	324	385 mW	201 mW
DBV (6)	55	294	425 mW	221 mW
DGK(8)	54.2	260	481 mW	250 mW
DGS(10)	54.1	258	485 mW	252 mW
N (14,16)	32	78	1600 mW	833 mW
P	41	104	1200 mW	625 mW
PW (14)	29.3	174	720 mW	374 mW
PW (16)	28.7	161	774 mW	403 mW

recommended operating conditions

			MIN	MAX	UNIT
Supply voltage, V_{DD}	Single supply		1.8	3.6	V
	Split supply		±0.8	±1.8	
Common-mode input voltage range, V_{ICR}			−0.2	V_{DD}+0.2	V
Operating free-air temperature, T_A	C-suffix		0	70	°C
	I-suffix		−40	85	
Shutdown on/off voltage level (see Note 2)	V_{IH}	V_{DD} < 2.7 V	0.75 V_{DD}		V
		V_{DD} = 2.7 to 3.6 V	2		
	V_{IL}			0.6	

NOTE 2: Relative to GND

electrical characteristics at recommended operating conditions, V_{DD} = 1.8 V, 2.4 V (unless otherwise noted)

dc performance

PARAMETER		TEST CONDITIONS		T_A†	MIN	TYP	MAX	UNIT
V_{IO}	Input offset voltage	$V_{IC} = V_{DD}/2$, $V_O = V_{DD}/2$, R_L = 300 kΩ, R_S = 50 Ω	TLV276x	25°C		550	3500	µV
				Full range			6800	
α_{VIO}	Offset voltage drift					9		µV/°C
CMRR	Common-mode rejection ratio	V_{ICR} = 0 V to V_{DD}, R_S = 50 Ω	V_{DD} = 1.8 V	25°C	50	70		dB
				Full range	48			
			V_{DD} = 2.4 V	25°C	53	72		dB
				Full range	50			dB
			V_{DD} = 3.6 V	25°C	55	76		dB
				Full range	55			
		V_{ICR} = 1.2 V to V_{DD}, R_S = 50 Ω	V_{DD} = 2.4 V, 3.6 V	25°C	63	82		dB
				Full range	60			
A_{VD}	Large-signal differential voltage amplification	R_L = 10 kΩ, $V_{O(PP)} = V_{DD}/2$	V_{DD} = 1.8 V	25°C	20	60		V/mV
				Full range	18			
			V_{DD} = 2.4 V	25°C	28	78		
				Full range	23			
			V_{DD} = 3.6 V	25°C	45	120		V/mV
				Full range	37			

† Full range is 0°C to 70°C for the C-suffix and −40°C to 85°C for the I-suffix. If not specified, full range is −40°C to 85°C.

input characteristics

PARAMETER		TEST CONDITIONS		T_A†	MIN	TYP	MAX	UNIT
I_{IO}	Input offset current	$V_{IC} = V_{DD}/2$, $V_O = V_{DD}/2$, R_L = 300 kΩ, R_S = 50 Ω		25°C		3	15	pA
			TLV276xC	Full range			100	
			TLV276xI	Full range			200	
I_{IB}	Input bias current			25°C		3	15	pA
			TLV276xC	Full range			100	
			TLV276xI	Full range			200	
$r_{i(d)}$	Differential input resistance			25°C		1000		GΩ
$c_{i(c)}$	Common-mode input capacitance	f = 16 kHz		25°C		10		pF

† Full range is 0°C to 70°C for the C-suffix and −40°C to 85°C for the I-suffix. If not specified, full range is −40°C to 85°C.

electrical characteristics at recommended operating conditions, V_{DD} = 1.8 V, 2.4 V (unless otherwise noted) (continued)

output characteristics

PARAMETER		TEST CONDITIONS		T_A†	MIN	TYP	MAX	UNIT
V_{OH}	High-level output voltage	$V_{IC} = V_{DD}/2$, $I_{OH} = -100\ \mu A$	V_{DD} = 1.8V	25°C	1.77	1.79		V
				Full range	1.76			
			V_{DD} = 2.4V	25°C	2.38	2.39		
				Full range	2.37			
			V_{DD} = 3.6V	25°C	3.58	3.59		
				Full range	3.57			
		$V_{IC} = V_{DD}/2$, $I_{OH} = -500\ \mu A$	V_{DD} = 1.8V	25°C	1.725	1.75		
				Full range	1.7			
			V_{DD} = 2.4V	25°C	2.325	2.35		
				Full range	2.3			
			V_{DD} = 3.6V	25°C	3.525	3.55		
				Full range	3.5			
V_{OL}	Low-level output voltage	$V_{IC} = V_{DD}/2$,	$I_{OL} = 100\ \mu A$	25°C		10	20	mV
				Full range			30	
		$V_{IC} = V_{DD}/2$,	$I_{OL} = 500\ \mu A$	25°C		50	75	
				Full range			100	
I_O	Output current	V_{DD} = 1.8 V, V_O = 0.5 V from	Positive rail	25°C		4.8		mA
			Negative rail			7.2		
		V_{DD} = 2.4 V, V_O = 0.5 V from	Positive rail	25°C		7.3		
			Negative rail			10.2		
I_{OS}	Short-circuit output current	V_{DD} = 1.8 V	Sourcing	25°C		7		mA
			Sinking			10		
		V_{DD} = 2.4 V	Sourcing	25°C		15		
			Sinking			19		

† Full range is 0°C to 70°C for the C-suffix and −40°C to 85°C for the I-suffix. If not specified, full range is −40°C to 85°C.

power supply, V_{DD} = 1.8 V, 2.4 V, 3.6 V (unless otherwise noted)

PARAMETER		TEST CONDITIONS		T_A†	MIN	TYP	MAX	UNIT
I_{DD}	Supply current (per channel)	$V_O = V_{DD}/2$,	$\overline{SHDN} = V_{DD}$	25°C		20	28	µA
				Full range			30	
k_{SVR}	Supply voltage rejection ratio (ΔV_{DD} /ΔV_{IO})	V_{DD} = 1.8 V to 2.4 V, $V_{IC} = V_{DD}/2$	No load	25°C	65	85		dB
				Full range	63			
		V_{DD} = 2.4 V to 3.6 V, $V_{IC} = V_{DD}/2$		25°C	65	85		
				Full range	63			
		V_{DD} = 1.8 V to 3.6 V, $V_{IC} = V_{DD}/2$		25°C	65	85		
				Full range	63			

† Full range is 0°C to 70°C for the C-suffix and −40°C to 85°C for the I-suffix. If not specified, full range is −40°C to 85°C.

electrical characteristics at recommended operating conditions, V_{DD} = 1.8 V, 2.4 V (unless otherwise noted) (continued)

dynamic performance

PARAMETER		TEST CONDITIONS		T_A†	MIN	TYP	MAX	UNIT
UGBW	Unity gain bandwidth	R_L = 300 kΩ,	C_L = 10 pF	25°C		500		kHz
SR+	Positive slew rate at unity gain	$V_{O(PP)}$ = 1 V, R_L = 300 kΩ, C_L = 50 pF,	V_{DD} = 1.8 V	25°C	0.11	0.20		V/µs
				Full range	0.09			
			V_{DD} = 2.4 V	25°C	0.11	0.22		
				Full range	0.09			
			V_{DD} = 3.6 V	25°C	0.11	0.23		V/µs
				Full range	0.09			
SR−	Negative slew rate at unity gain	$V_{O(PP)}$ = 1 V, R_L = 300 kΩ, C_L = 50 pF,	V_{DD} = 1.8 V	25°C	0.08	0.15		V/µs
				Full range	0.07			
			V_{DD} = 2.4 V	25°C	0.10	0.18		
				Full range	0.09			
			V_{DD} = 3.6 V	25°C	0.10	0.22		V/µs
				Full range	0.09			
ϕ_m	Phase margin	R_L = 300 kΩ,	C_L = 100 pF	25°C		63		°
	Gain margin			25°C		20		dB
t_s	Settling time	V_{DD} = 1.8 V, $V_{(STEP)PP}$ = 1 V, A_V = −1, C_L = 10 pF, R_L = 300 kΩ	0.1%	25°C		6.4		µs
			0.01%			13.7		
		V_{DD} = 2.4 V, $V_{(STEP)PP}$ = 1 V, A_V = −1, C_L = 10 pF, R_L = 300 kΩ	0.1%			6		
			0.01%			13.9		

† Full range is 0°C to 70°C for the C-suffix and −40°C to 85°C for the I-suffix. If not specified, full range is −40°C to 85°C.

noise/distortion

PARAMETER		TEST CONDITIONS		T_A	MIN	TYP	MAX	UNIT
THD + N	Total harmonic distortion plus noise	V_{DD} = 1.8 V, $V_{O(PP)}$ = V_{DD}/2 V, R_L = 300 kΩ, f = 1 kHz	A_V = 1	25°C		0.08%		
			A_V = 10			0.10%		
			A_V = 100			0.27%		
		V_{DD} = 2.4 V, $V_{O(PP)}$ = V_{DD}/2 V, R_L = 300 kΩ, f = 1 kHz	A_V = 1	25°C		0.06%		
			A_V = 10			0.08%		
			A_V = 100			0.24%		
V_n	Equivalent input noise voltage	f = 1 kHz		25°C		95		nV/√Hz
		f = 10 kHz		25°C		75		
I_n	Equivalent input noise current	f = 1 kHz		25°C		0.8		fA/√Hz

shutdown characteristics

PARAMETER		TEST CONDITIONS	T_A†	MIN	TYP	MAX	UNIT
$I_{DD(SHDN)}$	Supply current, all channels in shutdown mode (TLV2760, TLV2763, TLV2765) (per channel)	$\overline{SHDN}$ = 0 V	25°C		10	50	nA
			Full range			400	
$t_{(on)}$	Amplifier turnon time (see Note 3)	R_L = 300 kΩ	25°C		5		µs
$t_{(off)}$	Amplifier turnoff time (see Note 3)	R_L = 300 kΩ	25°C		0.8		µs

† Full range is 0°C to 70°C for the C-suffix and −40°C to 85°C for the I-suffix. If not specified, full range is −40°C to 85°C.

NOTE 3: Disable time and enable time are defined as the interval between application of the logic signal to $\overline{SHDN}$ and the point at which the supply current has reached half its final value.

TYPICAL CHARACTERISTICS

Table of Graphs

			FIGURE
V_{IO}	Input offset voltage	vs Common-mode input voltage	1, 2
CMRR	Common-mode rejection ratio	vs Frequency	3
V_{OH}	High-level output voltage	vs High-level output current	4, 6
V_{OL}	Low-level output voltage	vs Low-level output current	5, 7
$V_{O(PP)}$	Maximum peak-to-peak output voltage	vs Frequency	8
I_{DD}	Supply current	vs Supply voltage	9
I_{DD}	Supply current	vs Free-air temperature	10
PSRR	Power supply rejection ratio	vs Frequency	11
A_{VD}	Differential voltage amplification & phase	vs Frequency	12
	Gain-bandwidth product	vs Temperature	13
		vs Supply voltage	14
SR	Slew rate	vs Supply voltage	15
		vs Free-air temperature	16, 17
ϕ_m	Phase margin	vs Load capacitance	18
V_n	Equivalent input noise voltage	vs Frequency	19
	Supply current and output voltage	vs Time	20
	Voltage-follower large-signal pulse response	vs Time	21
	Voltage-follower small-signal pulse response	vs Time	22
	Inverting large-signal response	vs Time	23
	Inverting small-signal response	vs Time	24
	Crosstalk	vs Frequency	25
	Shutdown forward & reverse isolation	vs Frequency	26
$I_{DD(SHDN)}$	Shutdown supply current	vs Supply voltage	27
$I_{DD(SHDN)}$	Shutdown supply current	vs Free-air temperature	28
$I_{DD(SHDN)}$	Shutdown pin leakage current	vs Shutdown pin voltage	29
$I_{DD(SHDN)}$	Shutdown supply current/output voltage	vs Time	30

TYPICAL CHARACTERISTICS

INPUT OFFSET VOLTAGE vs COMMON-MODE INPUT VOLTAGE

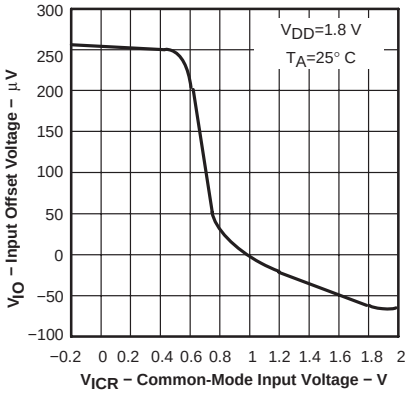

Figure 1

INPUT OFFSET VOLTAGE vs COMMON-MODE INPUT VOLTAGE

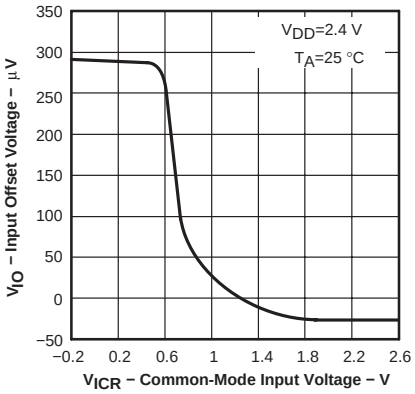

Figure 2

COMMON-MODE REJECTION RATIO vs FREQUENCY

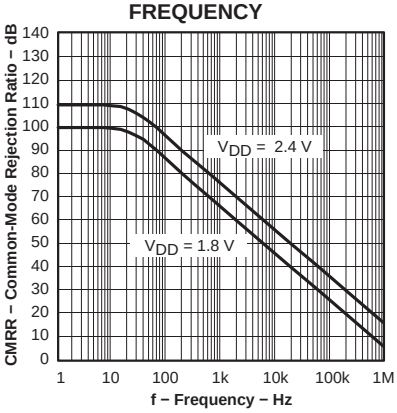

Figure 3

HIGH-LEVEL OUTPUT VOLTAGE vs HIGH-LEVEL OUTPUT CURRENT

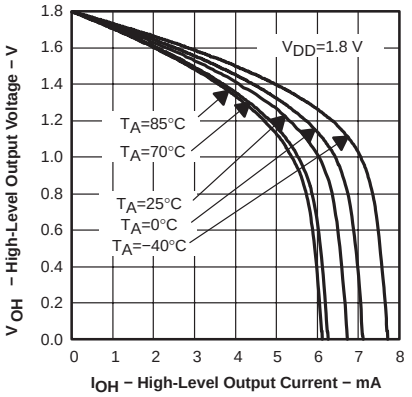

Figure 4

LOW-LEVEL OUTPUT VOLTAGE vs LOW-LEVEL OUTPUT CURRENT

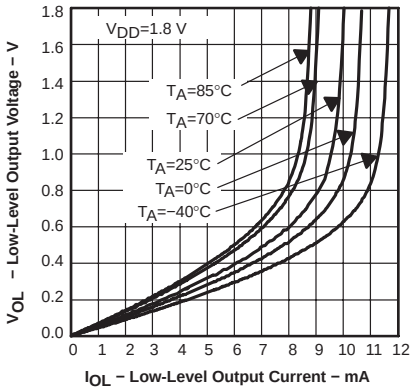

Figure 5

HIGH-LEVEL OUTPUT VOLTAGE vs HIGH-LEVEL OUTPUT CURRENT

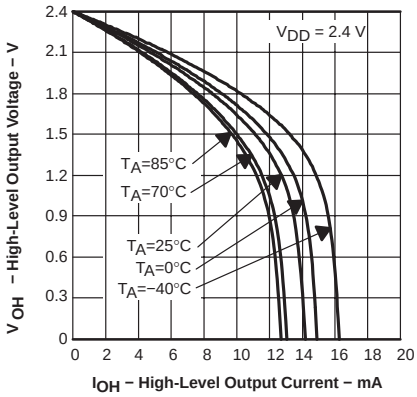

Figure 6

LOW-LEVEL OUTPUT VOLTAGE vs LOW-LEVEL OUTPUT CURRENT

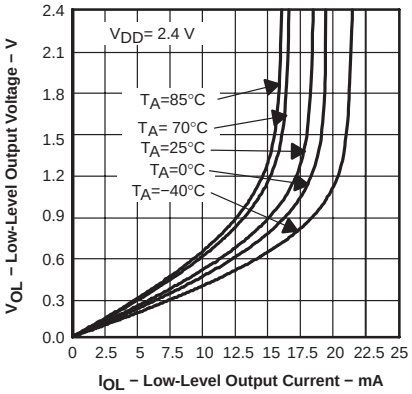

Figure 7

MAXIMUM PEAK-TO-PEAK OUTPUT VOLTAGE vs FREQUENCY

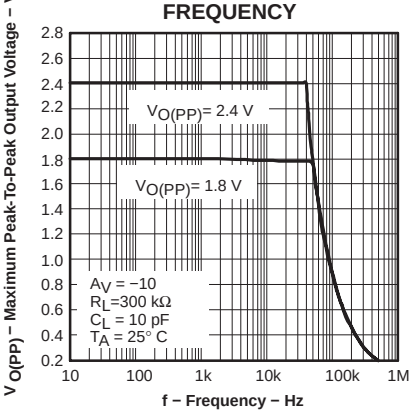

Figure 8

TYPICAL CHARACTERISTICS

SUPPLY CURRENT vs SUPPLY VOLTAGE

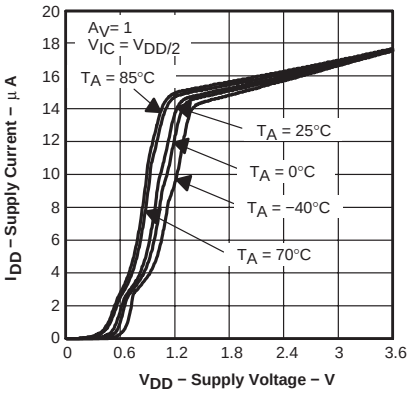

Figure 9

SUPPLY CURRENT vs FREE-AIR TEMPERATURE

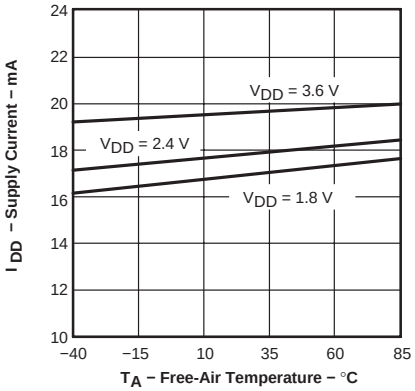

Figure 10

POWER SUPPLY REJECTION RATIO vs FREQUENCY

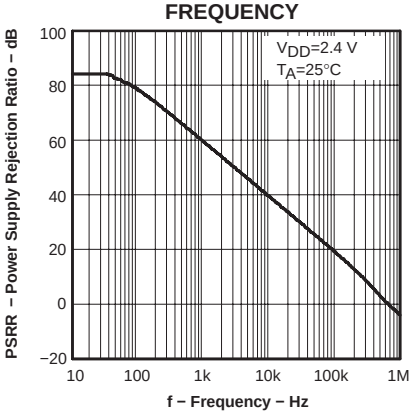

Figure 11

DIFFERENTIAL VOLTAGE GAIN AND PHASE vs FREQUENCY

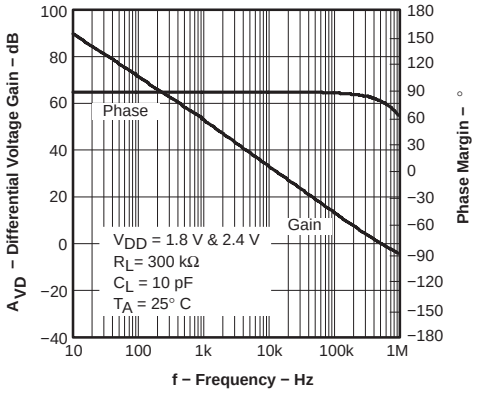

Figure 12

GAIN BANDWIDTH PRODUCT vs TEMPERATURE

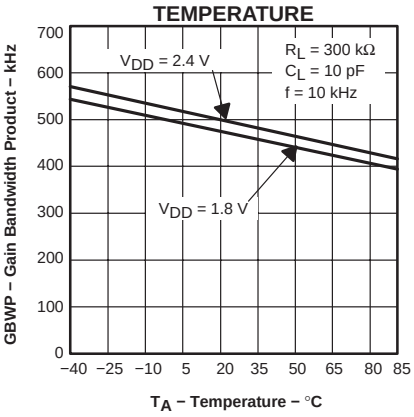

Figure 13

GAIN-BANDWIDTH PRODUCT vs SUPPLY VOLTAGE

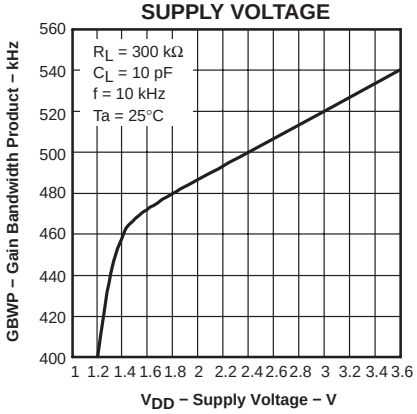

Figure 14

SLEW RATE vs SUPPLY VOLTAGE

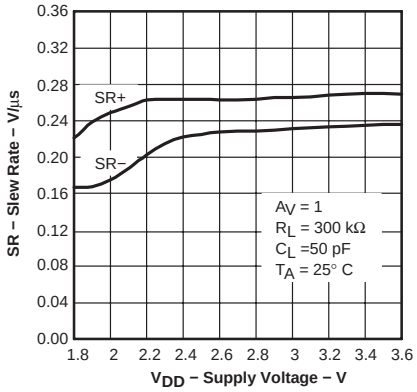

Figure 15

TYPICAL CHARACTERISTICS

SLEW RATE vs FREE-AIR TEMPERATURE

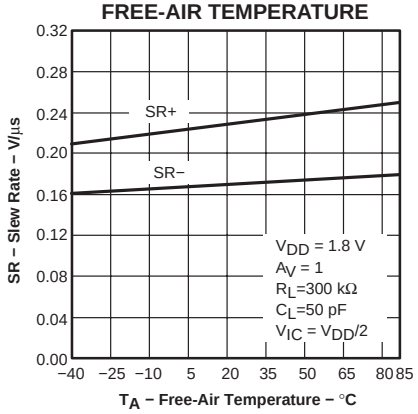

Figure 16

SLEW RATE vs FREE-AIR TEMPERATURE

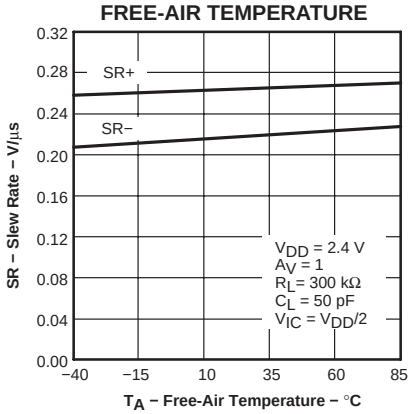

Figure 17

PHASE MARGIN vs LOAD CAPACITANCE

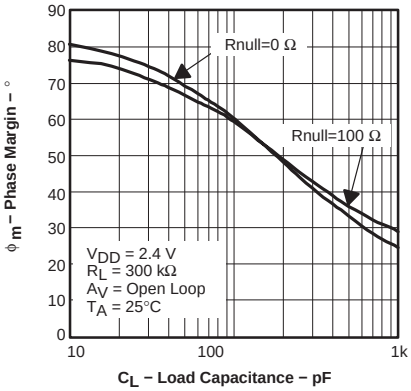

Figure 18

EQUIVALENT INPUT NOISE VOLTAGE vs FREQUENCY

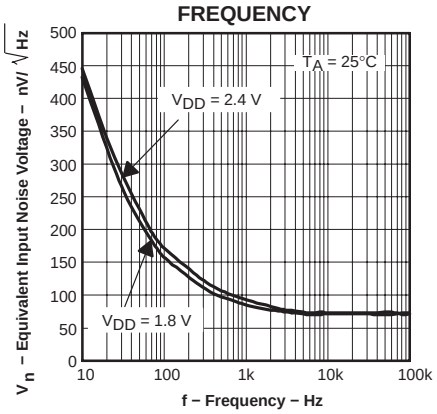

Figure 19

SUPPLY CURRENT AND OUTPUT VOLTAGE vs TIME

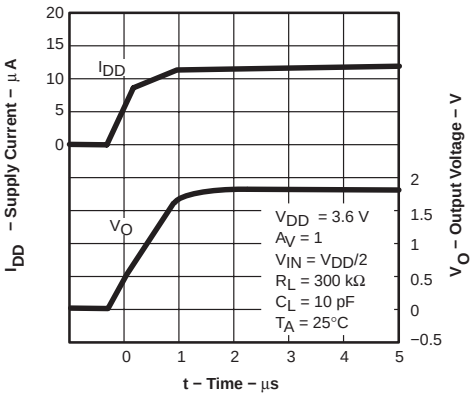

Figure 20

VOLTAGE-FOLLOWER LARGE-SIGNAL PULSE RESPONSE vs TIME

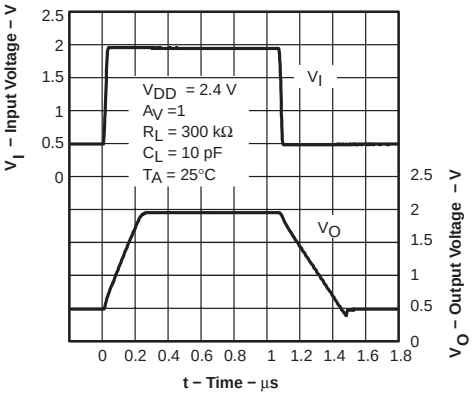

Figure 21

VOLTAGE-FOLLOWER SMALL-SIGNAL PULSE RESPONSE vs TIME

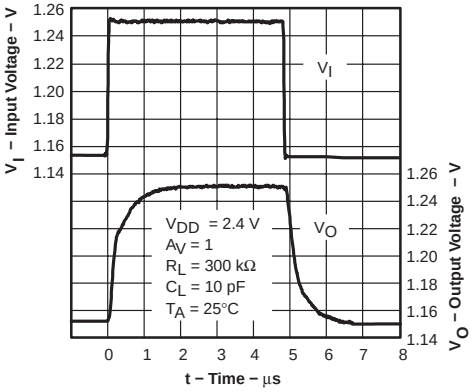

Figure 22

TYPICAL CHARACTERISTICS

INVERTING LARGE-SIGNAL RESPONSE vs TIME

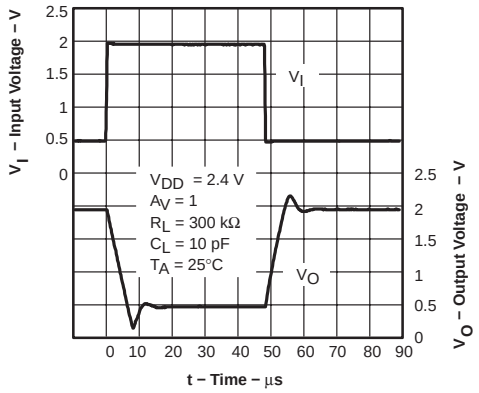

Figure 23

INVERTING SMALL-SIGNAL PULSE RESPONSE vs TIME

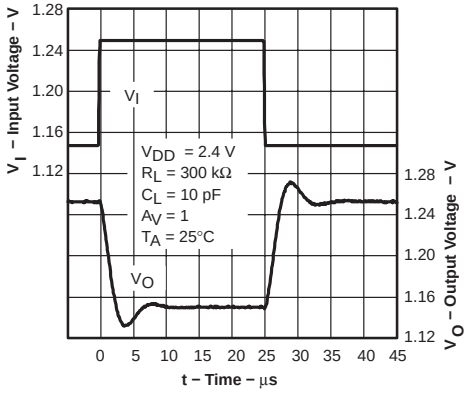

Figure 24

CROSSTALK vs FREQUENCY

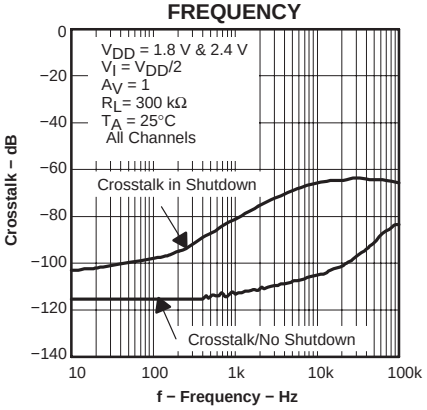

Figure 25

SHUTDOWN FORWARD AND REVERSE ISOLATION vs FREQUENCY

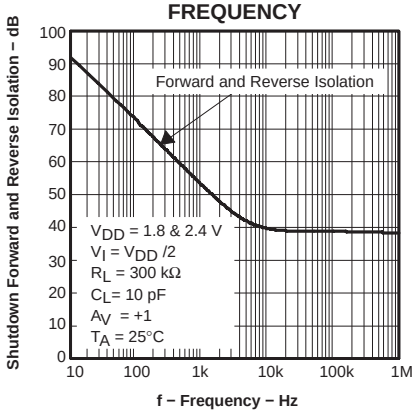

Figure 26

SHUTDOWN SUPPLY CURRENT vs SUPPLY VOLTAGE

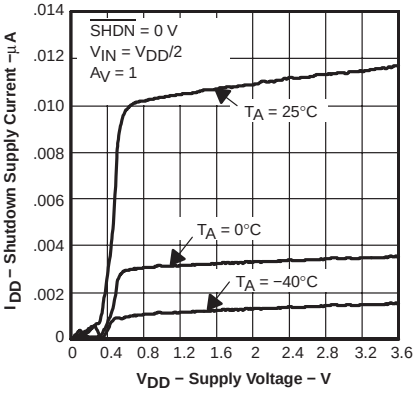

Figure 27

SHUTDOWN SUPPLY CURRENT vs FREE-AIR TEMPERATURE

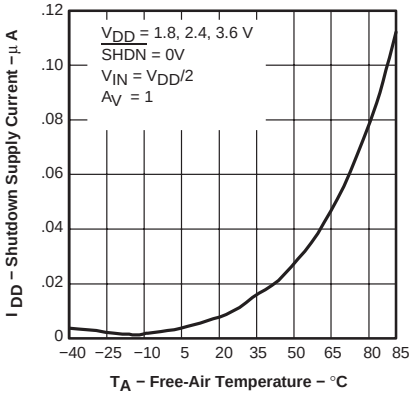

Figure 28

SHUTDOWN PIN LEAKAGE CURRENT vs SHUTDOWN PIN VOLTAGE

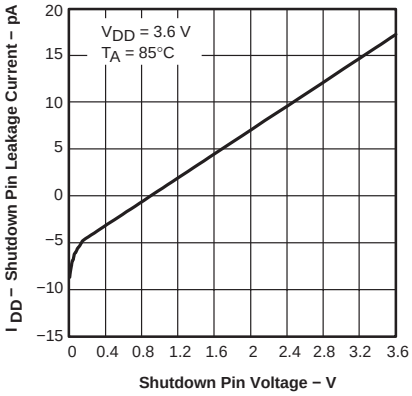

Figure 29

TYPICAL CHARACTERISTICS

SHUTDOWN SUPPLY CURRENT / OUTPUT VOLTAGE vs TIME

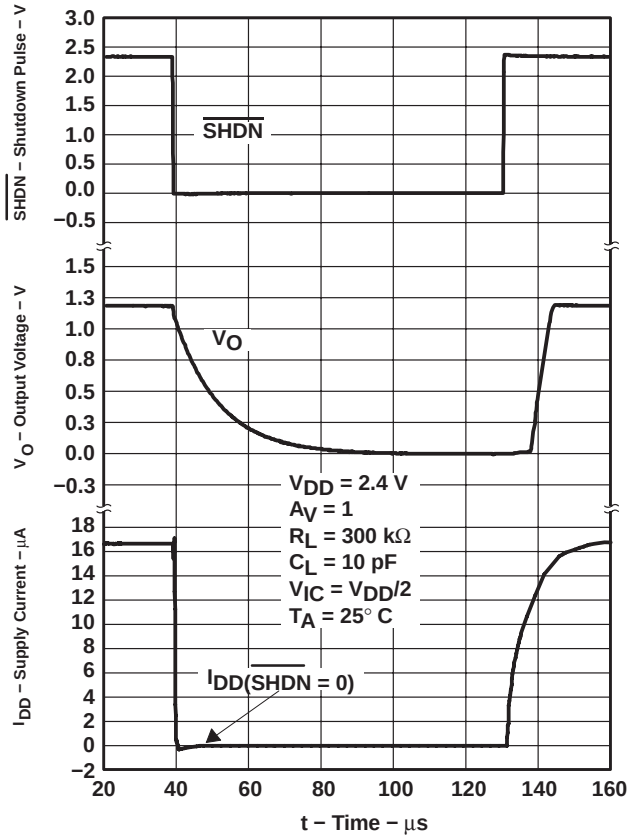

Figure 30

APPLICATION INFORMATION

driving a capacitive load

When the amplifier is configured in this manner, capacitive loading directly on the output will decrease the device's phase margin leading to high frequency ringing or oscillations. Therefore, for capacitive loads of greater than 10 pF, it is recommended that a resistor be placed in series (R_{NULL}) with the output of the amplifier, as shown in Figure 31. A minimum value of 20 Ω should work well for most applications.

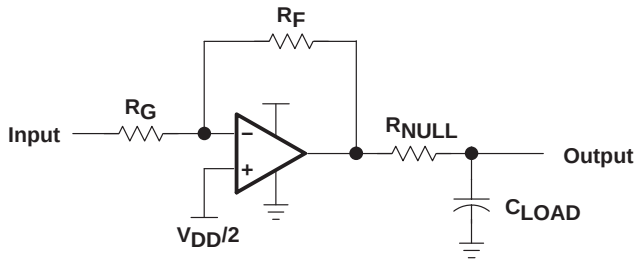

Figure 31. Driving a Capacitive Load

offset voltage

The output offset voltage, (V_{OO}) is the sum of the input offset voltage (V_{IO}) and both input bias currents (I_{IB}) times the corresponding gains. The following schematic and formula can be used to calculate the output offset voltage:

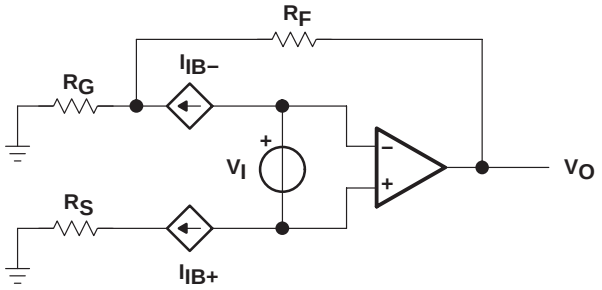

$$V_{OO} = V_{IO}\left(1 + \left(\frac{R_F}{R_G}\right)\right) \pm I_{IB+} R_S \left(1 + \left(\frac{R_F}{R_G}\right)\right) \pm I_{IB-} R_F$$

Figure 32. Output Offset Voltage Model

general configurations

When receiving low-level signals, limiting the bandwidth of the incoming signals into the system is often required. The simplest way to accomplish this is to place an RC filter at the noninverting terminal of the amplifier (see Figure 33).

APPLICATION INFORMATION

general configurations (continued)

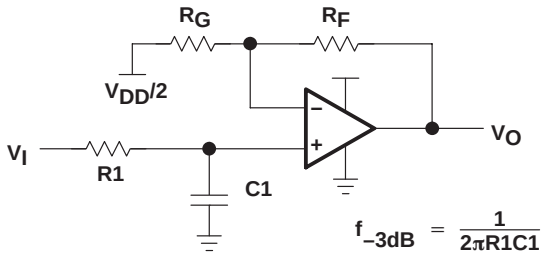

$$f_{-3dB} = \frac{1}{2\pi R1C1}$$

$$\frac{V_O}{V_I} = \left(1 + \frac{R_F}{R_G}\right)\left(\frac{1}{1 + 2\pi fR1C1}\right)$$

Figure 33. Single-Pole Low-Pass Filter

If even more attenuation is needed, a multiple pole filter is required. The Sallen-Key filter can be used for this task. For best results, the amplifier should have a bandwidth that is 8 to 10 times the filter frequency bandwidth. Failure to do this can result in phase shift of the amplifier.

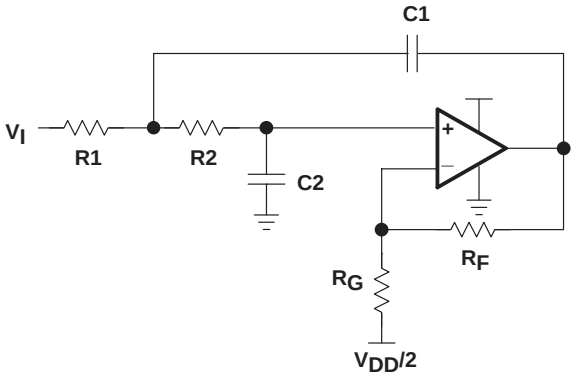

R1 = R2 = R
C1 = C2 = C
Q = Peaking Factor
(Butterworth Q = 0.707)

$$f_{-3dB} = \frac{1}{2\pi RC}$$

$$R_G = \frac{R_F}{\left(2 - \frac{1}{Q}\right)}$$

Figure 34. 2-Pole Low-Pass Sallen-Key Filter

circuit layout considerations

To achieve the levels of high performance of the TLV276x, follow proper printed-circuit board design techniques. A general set of guidelines is given in the following.

- Ground planes—It is highly recommended that a ground plane be used on the board to provide all components with a low inductive ground connection. However, in the areas of the amplifier inputs and output, the ground plane can be removed to minimize the stray capacitance.
- Proper power supply decoupling—Use a 6.8-µF tantalum capacitor in parallel with a 0.1-µF ceramic capacitor on each supply terminal. It may be possible to share the tantalum among several amplifiers depending on the application, but a 0.1-µF ceramic capacitor should always be used on the supply terminal of every amplifier. In addition, the 0.1-µF capacitor should be placed as close as possible to the supply terminal. As this distance increases, the inductance in the connecting trace makes the capacitor less effective. The designer should strive for distances of less than 0.1 inches between the device power terminals and the ceramic capacitors.

APPLICATION INFORMATION

circuit layout considerations (continued)

- Sockets—Sockets can be used but are not recommended. The additional lead inductance in the socket pins will often lead to stability problems. Surface-mount packages soldered directly to the printed-circuit board is the best implementation.
- Short trace runs/compact part placements—Optimum high performance is achieved when stray series inductance has been minimized. To realize this, the circuit layout should be made as compact as possible, thereby minimizing the length of all trace runs. Particular attention should be paid to the inverting input of the amplifier. Its length should be kept as short as possible. This will help to minimize stray capacitance at the input of the amplifier.
- Surface-mount passive components—Using surface-mount passive components is recommended for high performance amplifier circuits for several reasons. First, because of the extremely low lead inductance of surface-mount components, the problem with stray series inductance is greatly reduced. Second, the small size of surface-mount components naturally leads to a more compact layout thereby minimizing both stray inductance and capacitance. If leaded components are used, it is recommended that the lead lengths be kept as short as possible.

shutdown function

Three members of the TLV276x family (TLV2760/3/5) have a shutdown terminal for conserving battery life in portable applications. When the shutdown terminal is pulled low, the supply current is reduced to 10 nA/channel, the amplifier is disabled, and the outputs are placed in a high impedance mode. To enable the amplifier, the shutdown terminal must be pulled high. The shutdown terminal should never be left floating. If the shutdown feature is not desired, directly tie the shutdown terminal to the positive rail. The shutdown terminal threshold is always referenced to the GND terminal of the device. Therefore, when operating the device with split supply voltages (e.g. ±1.8 V), the shutdown terminal needs to be pulled to the negative rail, not the system ground, to disable the operational amplifier.

The amplifier is powered with a single 2.4-V supply and configured as a noninverting configuration with a unity gain. Turnon and turnoff times are defined as the interval between application of the logic signal to the shutdown pin and the point at which the supply current has reached half its final value. The times for the single, dual, and quad are listed in the data tables.

general power dissipation considerations

For a given θ_{JA}, the maximum power dissipation is shown in Figure 35 and is calculated by the following formula:

$$P_D = \left(\frac{T_{MAX} - T_A}{\theta_{JA}}\right)$$

Where:

P_D = Maximum power dissipation of TLV276x IC (watts)
T_{MAX} = Absolute maximum junction temperature (150°C)
T_A = Free-ambient air temperature (°C)
θ_{JA} = $\theta_{JC} + \theta_{CA}$
θ_{JC} = Thermal coefficient from junction to case
θ_{CA} = Thermal coefficient from case to ambient air (°C/W)

APPLICATION INFORMATION

general power dissipation considerations (continued)

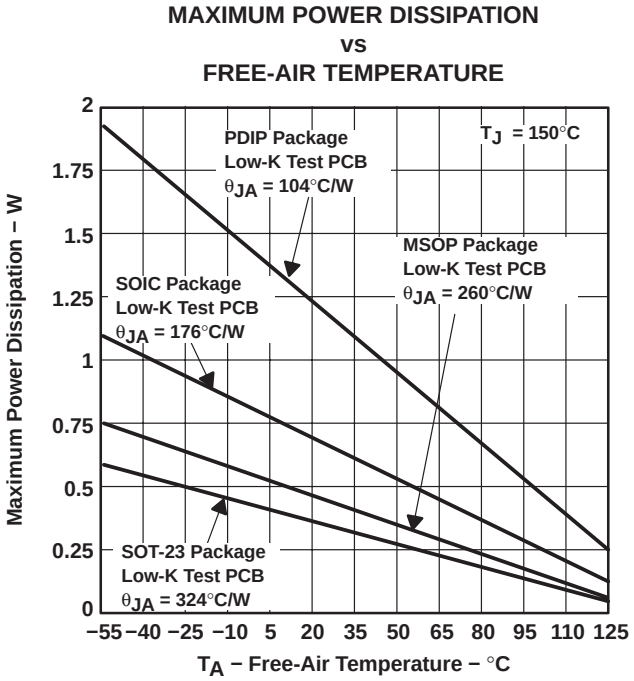

NOTE A: Results are with no air flow and using JEDEC Standard Low-K test PCB.

Figure 35. Maximum Power Dissipation vs Free-Air Temperature

APPLICATION INFORMATION

macromodel information

Macromodel information provided was derived using Microsim *Parts*™ Release 9.1, the model generation software used with Microsim *PSpice*™. The Boyle macromodel (see Note 4) and subcircuit in Figure 36 are generated using TLV276x typical electrical and operating characteristics at T_A = 25°C. Using this information, output simulations of the following key parameters can be generated to a tolerance of 20% (in most cases):

- Maximum positive output voltage swing
- Maximum negative output voltage swing
- Slew rate
- Quiescent power dissipation
- Input bias current
- Open-loop voltage amplification
- Unity-gain frequency
- Common-mode rejection ratio
- Phase margin
- DC output resistance
- AC output resistance
- Short-circuit output current limit

NOTE 4: G. R. Boyle, B. M. Cohn, D. O. Pederson, and J. E. Solomon, “Macromodeling of Integrated Circuit Operational Amplifiers,” *IEEE Journal of Solid-State Circuits,* SC-9, 353 (1974).

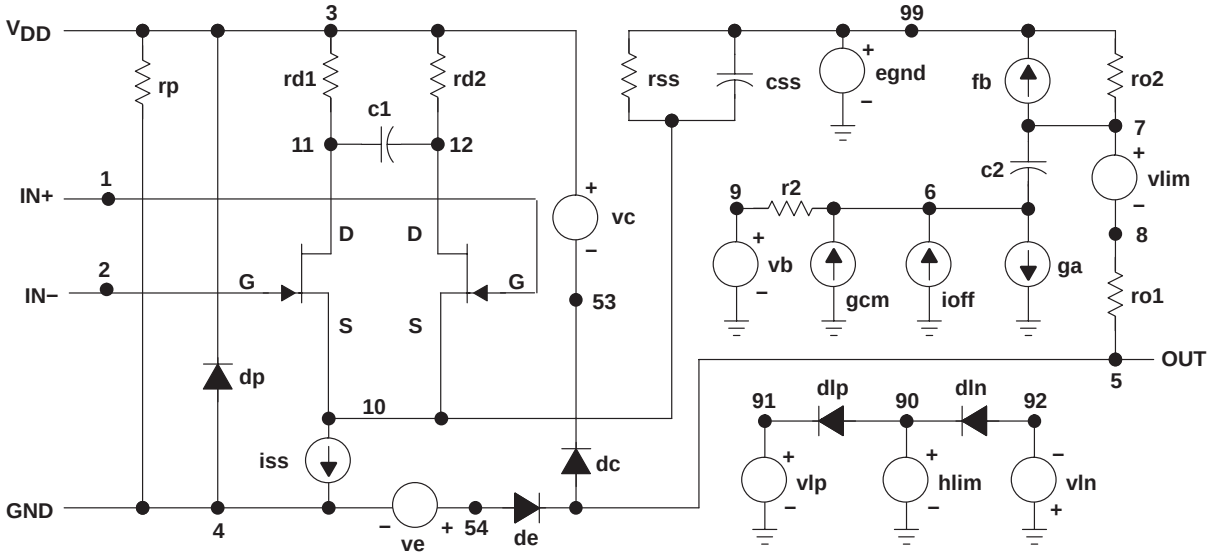


```
*DEVICE=amp_tlv276x_highVdd,OPAMP,NJF,INT
* amp_tlv_276x_highVdd operational amplifier ”macromodel”
* subcircuit updated using Model Editor release 9.1 on 05/15/00
* at 14:40 Model Editor is an OrCAD product.
*
* connections:                  non-inverting input
*                               | inverting input
*                               | | positive power supply
*                               | | | negative power supply
*                               | | | | output
*                               | | | | |
.subckt amp_tlv276x_highVdd     1 2 3 4 5
*
c1      11      12      457.48E−15
c2      6       7       5.0000E−12
css     10      99      1.1431E−12
dc      5       53      dy
de      54      5       dy
dlp     90      91      dx
dln     92      90      dx
dp      4       3       dx
egnd    99      0       poly(2) (3,0) (4,0) 0 .5 .5
fb      7       99      poly(5) vb vc ve vlp vln 0
                        176.02E6 −1E3 1E3 180E6
                        −180E6
ga      6       0       11 12 16.272E−6
gcm     0       6       10 99 6.8698E−9
iss     10      4       dc 1.3371E−6
hlim    90      0       vlim 1K
j1      11      2       10 jx1
J2      12      1       10 jx2
r2      6       9       100.00E3
rd1     3       11      61.456E3
rd2     3       12      61.456E3
ro1     8       5       10
ro2     7       99      10
rp      3       4       150.51E3
rss     10      99      149.58E6
vb      9       0       dc 0
vc      3       53      dc .78905
ve      54      4       dc .78905
vlim    7       8       dc 0
vlp     91      0       dc 14.200
vln     0       92      dc 14.200
.model  dx      D(Is=800.00E−18)
.model  dy      D(Is=800.00E−18 Rs=1m Cjo=10p)
.model  jx1     NJF(Is=500.00E−15 Beta=198.03E−6 Vto=−1)
.model  jx2     NJF(Is=500.00E−15 Beta=198.03E−6 Vto=−1)
.ends
```

Figure 36. Boyle Macromodel and Subcircuit

PSpice and *Parts* are trademarks of MicroSim Corporation.

PACKAGING INFORMATION

Orderable Device	Status (1)	Package Type	Package Drawing	Pins	Package Qty	Eco Plan (2)	Lead/ Ball Finish	MSL Peak Temp (3)	Samples (Requires Login)
TLV2760ID	ACTIVE	SOIC	D	8	75	Green (RoHS & no Sb/Br)	CU NIPDAU	Level-1-260C-UNLIM	Request Free Samples
TLV2760IDBVR	ACTIVE	SOT-23	DBV	6	3000	Green (RoHS & no Sb/Br)	CU NIPDAU	Level-1-260C-UNLIM	Purchase Samples
TLV2760IDBVRG4	ACTIVE	SOT-23	DBV	6	3000	Green (RoHS & no Sb/Br)	CU NIPDAU	Level-1-260C-UNLIM	Purchase Samples
TLV2760IDBVT	ACTIVE	SOT-23	DBV	6	250	Green (RoHS & no Sb/Br)	CU NIPDAU	Level-1-260C-UNLIM	Request Free Samples
TLV2760IDBVTG4	ACTIVE	SOT-23	DBV	6	250	Green (RoHS & no Sb/Br)	CU NIPDAU	Level-1-260C-UNLIM	Request Free Samples
TLV2760IDG4	ACTIVE	SOIC	D	8	75	Green (RoHS & no Sb/Br)	CU NIPDAU	Level-1-260C-UNLIM	Request Free Samples
TLV2760IP	ACTIVE	PDIP	P	8	50	Pb-Free (RoHS)	CU NIPDAU	N / A for Pkg Type	Request Free Samples
TLV2760IPE4	ACTIVE	PDIP	P	8	50	Pb-Free (RoHS)	CU NIPDAU	N / A for Pkg Type	Request Free Samples
TLV2761CD	ACTIVE	SOIC	D	8	75	Green (RoHS & no Sb/Br)	CU NIPDAU	Level-1-260C-UNLIM	Purchase Samples
TLV2761CDG4	ACTIVE	SOIC	D	8	75	Green (RoHS & no Sb/Br)	CU NIPDAU	Level-1-260C-UNLIM	Purchase Samples
TLV2761ID	ACTIVE	SOIC	D	8	75	Green (RoHS & no Sb/Br)	CU NIPDAU	Level-1-260C-UNLIM	Request Free Samples
TLV2761IDBVR	ACTIVE	SOT-23	DBV	5	3000	Green (RoHS & no Sb/Br)	CU NIPDAU	Level-1-260C-UNLIM	Purchase Samples
TLV2761IDBVRG4	ACTIVE	SOT-23	DBV	5	3000	Green (RoHS & no Sb/Br)	CU NIPDAU	Level-1-260C-UNLIM	Purchase Samples
TLV2761IDBVT	ACTIVE	SOT-23	DBV	5	250	Green (RoHS & no Sb/Br)	CU NIPDAU	Level-1-260C-UNLIM	Request Free Samples
TLV2761IDBVTG4	ACTIVE	SOT-23	DBV	5	250	Green (RoHS & no Sb/Br)	CU NIPDAU	Level-1-260C-UNLIM	Request Free Samples
TLV2761IDG4	ACTIVE	SOIC	D	8	75	Green (RoHS & no Sb/Br)	CU NIPDAU	Level-1-260C-UNLIM	Request Free Samples
TLV2761IP	ACTIVE	PDIP	P	8	50	Pb-Free (RoHS)	CU NIPDAU	N / A for Pkg Type	Request Free Samples
TLV2761IPE4	ACTIVE	PDIP	P	8	50	Pb-Free (RoHS)	CU NIPDAU	N / A for Pkg Type	Request Free Samples

Orderable Device	Status (1)	Package Type	Package Drawing	Pins	Package Qty	Eco Plan (2)	Lead/ Ball Finish	MSL Peak Temp (3)	Samples (Requires Login)
TLV2762CD	ACTIVE	SOIC	D	8	75	Green (RoHS & no Sb/Br)	CU NIPDAU	Level-1-260C-UNLIM	Purchase Samples
TLV2762CDG4	ACTIVE	SOIC	D	8	75	Green (RoHS & no Sb/Br)	CU NIPDAU	Level-1-260C-UNLIM	Purchase Samples
TLV2762CDR	ACTIVE	SOIC	D	8	2500	Green (RoHS & no Sb/Br)	CU NIPDAU	Level-1-260C-UNLIM	Purchase Samples
TLV2762CDRG4	ACTIVE	SOIC	D	8	2500	Green (RoHS & no Sb/Br)	CU NIPDAU	Level-1-260C-UNLIM	Purchase Samples
TLV2762ID	ACTIVE	SOIC	D	8	75	Green (RoHS & no Sb/Br)	CU NIPDAU	Level-1-260C-UNLIM	Contact TI Distributor or Sales Office
TLV2762IDG4	ACTIVE	SOIC	D	8	75	Green (RoHS & no Sb/Br)	CU NIPDAU	Level-1-260C-UNLIM	Contact TI Distributor or Sales Office
TLV2762IDGK	ACTIVE	MSOP	DGK	8	80	Green (RoHS & no Sb/Br)	CU NIPDAU	Level-1-260C-UNLIM	Contact TI Distributor or Sales Office
TLV2762IDGKG4	ACTIVE	MSOP	DGK	8	80	Green (RoHS & no Sb/Br)	CU NIPDAU	Level-1-260C-UNLIM	Contact TI Distributor or Sales Office
TLV2762IDGKR	ACTIVE	MSOP	DGK	8	2500	Green (RoHS & no Sb/Br)	CU NIPDAU	Level-1-260C-UNLIM	Request Free Samples
TLV2762IDGKRG4	ACTIVE	MSOP	DGK	8	2500	Green (RoHS & no Sb/Br)	CU NIPDAU	Level-1-260C-UNLIM	Request Free Samples
TLV2762IDR	ACTIVE	SOIC	D	8	2500	Green (RoHS & no Sb/Br)	CU NIPDAU	Level-1-260C-UNLIM	Request Free Samples
TLV2762IDRG4	ACTIVE	SOIC	D	8	2500	Green (RoHS & no Sb/Br)	CU NIPDAU	Level-1-260C-UNLIM	Request Free Samples
TLV2763CD	ACTIVE	SOIC	D	14	50	Green (RoHS & no Sb/Br)	CU NIPDAU	Level-1-260C-UNLIM	Purchase Samples
TLV2763CDG4	ACTIVE	SOIC	D	14	50	Green (RoHS & no Sb/Br)	CU NIPDAU	Level-1-260C-UNLIM	Purchase Samples
TLV2763CDR	ACTIVE	SOIC	D	14	2500	Green (RoHS & no Sb/Br)	CU NIPDAU	Level-1-260C-UNLIM	Request Free Samples
TLV2763CDRG4	ACTIVE	SOIC	D	14	2500	Green (RoHS & no Sb/Br)	CU NIPDAU	Level-1-260C-UNLIM	Request Free Samples
TLV2763IDGS	ACTIVE	MSOP	DGS	10	80	Green (RoHS & no Sb/Br)	CU NIPDAU	Level-1-260C-UNLIM	Purchase Samples
TLV2763IDGSG4	ACTIVE	MSOP	DGS	10	80	Green (RoHS & no Sb/Br)	CU NIPDAU	Level-1-260C-UNLIM	Purchase Samples

Orderable Device	Status (1)	Package Type	Package Drawing	Pins	Package Qty	Eco Plan (2)	Lead/ Ball Finish	MSL Peak Temp (3)	Samples (Requires Login)
TLV2763IDGSR	ACTIVE	MSOP	DGS	10	2500	Green (RoHS & no Sb/Br)	CU NIPDAU	Level-1-260C-UNLIM	Request Free Samples
TLV2763IDGSRG4	ACTIVE	MSOP	DGS	10	2500	Green (RoHS & no Sb/Br)	CU NIPDAU	Level-1-260C-UNLIM	Request Free Samples
TLV2763IDR	ACTIVE	SOIC	D	14	2500	Green (RoHS & no Sb/Br)	CU NIPDAU	Level-1-260C-UNLIM	Request Free Samples
TLV2763IDRG4	ACTIVE	SOIC	D	14	2500	Green (RoHS & no Sb/Br)	CU NIPDAU	Level-1-260C-UNLIM	Request Free Samples
TLV2763IN	ACTIVE	PDIP	N	14	25	Pb-Free (RoHS)	CU NIPDAU	N / A for Pkg Type	Request Free Samples
TLV2763INE4	ACTIVE	PDIP	N	14	25	Pb-Free (RoHS)	CU NIPDAU	N / A for Pkg Type	Request Free Samples
TLV2764CD	ACTIVE	SOIC	D	14	50	Green (RoHS & no Sb/Br)	CU NIPDAU	Level-1-260C-UNLIM	Purchase Samples
TLV2764CDG4	ACTIVE	SOIC	D	14	50	Green (RoHS & no Sb/Br)	CU NIPDAU	Level-1-260C-UNLIM	Purchase Samples
TLV2764CDR	ACTIVE	SOIC	D	14	2500	Green (RoHS & no Sb/Br)	CU NIPDAU	Level-1-260C-UNLIM	Purchase Samples
TLV2764CDRG4	ACTIVE	SOIC	D	14	2500	Green (RoHS & no Sb/Br)	CU NIPDAU	Level-1-260C-UNLIM	Purchase Samples
TLV2764ID	ACTIVE	SOIC	D	14	50	Green (RoHS & no Sb/Br)	CU NIPDAU	Level-1-260C-UNLIM	Contact TI Distributor or Sales Office
TLV2764IDG4	ACTIVE	SOIC	D	14	50	Green (RoHS & no Sb/Br)	CU NIPDAU	Level-1-260C-UNLIM	Contact TI Distributor or Sales Office
TLV2764IDR	ACTIVE	SOIC	D	14	2500	Green (RoHS & no Sb/Br)	CU NIPDAU	Level-1-260C-UNLIM	Request Free Samples
TLV2764IDRG4	ACTIVE	SOIC	D	14	2500	Green (RoHS & no Sb/Br)	CU NIPDAU	Level-1-260C-UNLIM	Request Free Samples
TLV2764IN	ACTIVE	PDIP	N	14	25	Pb-Free (RoHS)	CU NIPDAU	N / A for Pkg Type	Request Free Samples
TLV2764INE4	ACTIVE	PDIP	N	14	25	Pb-Free (RoHS)	CU NIPDAU	N / A for Pkg Type	Request Free Samples
TLV2764IPW	ACTIVE	TSSOP	PW	14	90	Green (RoHS & no Sb/Br)	CU NIPDAU	Level-1-260C-UNLIM	Purchase Samples
TLV2764IPWG4	ACTIVE	TSSOP	PW	14	90	Green (RoHS & no Sb/Br)	CU NIPDAU	Level-1-260C-UNLIM	Purchase Samples
TLV2764IPWR	ACTIVE	TSSOP	PW	14	2000	Green (RoHS & no Sb/Br)	CU NIPDAU	Level-1-260C-UNLIM	Request Free Samples

Orderable Device	Status [1]	Package Type	Package Drawing	Pins	Package Qty	Eco Plan [2]	Lead/ Ball Finish	MSL Peak Temp [3]	Samples (Requires Login)
TLV2764IPWRG4	ACTIVE	TSSOP	PW	14	2000	Green (RoHS & no Sb/Br)	CU NIPDAU	Level-1-260C-UNLIM	Request Free Samples
TLV2765CD	ACTIVE	SOIC	D	16	40	Green (RoHS & no Sb/Br)	CU NIPDAU	Level-1-260C-UNLIM	Purchase Samples
TLV2765CDG4	ACTIVE	SOIC	D	16	40	Green (RoHS & no Sb/Br)	CU NIPDAU	Level-1-260C-UNLIM	Purchase Samples
TLV2765CDR	ACTIVE	SOIC	D	16	2500	Green (RoHS & no Sb/Br)	CU NIPDAU	Level-1-260C-UNLIM	Purchase Samples
TLV2765CDRG4	ACTIVE	SOIC	D	16	2500	Green (RoHS & no Sb/Br)	CU NIPDAU	Level-1-260C-UNLIM	Purchase Samples
TLV2765ID	ACTIVE	SOIC	D	16	40	Green (RoHS & no Sb/Br)	CU NIPDAU	Level-1-260C-UNLIM	Contact TI Distributor or Sales Office
TLV2765IDG4	ACTIVE	SOIC	D	16	40	Green (RoHS & no Sb/Br)	CU NIPDAU	Level-1-260C-UNLIM	Contact TI Distributor or Sales Office
TLV2765IDR	ACTIVE	SOIC	D	16	2500	Green (RoHS & no Sb/Br)	CU NIPDAU	Level-1-260C-UNLIM	Request Free Samples
TLV2765IDRG4	ACTIVE	SOIC	D	16	2500	Green (RoHS & no Sb/Br)	CU NIPDAU	Level-1-260C-UNLIM	Request Free Samples
TLV2765IPW	ACTIVE	TSSOP	PW	16	90	Green (RoHS & no Sb/Br)	CU NIPDAU	Level-1-260C-UNLIM	Contact TI Distributor or Sales Office
TLV2765IPWG4	ACTIVE	TSSOP	PW	16	90	Green (RoHS & no Sb/Br)	CU NIPDAU	Level-1-260C-UNLIM	Contact TI Distributor or Sales Office
TLV2765IPWR	ACTIVE	TSSOP	PW	16	2000	Green (RoHS & no Sb/Br)	CU NIPDAU	Level-1-260C-UNLIM	Request Free Samples
TLV2765IPWRG4	ACTIVE	TSSOP	PW	16	2000	Green (RoHS & no Sb/Br)	CU NIPDAU	Level-1-260C-UNLIM	Request Free Samples

[1] The marketing status values are defined as follows:
ACTIVE: Product device recommended for new designs.
LIFEBUY: TI has announced that the device will be discontinued, and a lifetime-buy period is in effect.
NRND: Not recommended for new designs. Device is in production to support existing customers, but TI does not recommend using this part in a new design.
PREVIEW: Device has been announced but is not in production. Samples may or may not be available.
OBSOLETE: TI has discontinued the production of the device.

[2] Eco Plan - The planned eco-friendly classification: Pb-Free (RoHS), Pb-Free (RoHS Exempt), or Green (RoHS & no Sb/Br) - please check http://www.ti.com/productcontent for the latest availability information and additional product content details.
TBD: The Pb-Free/Green conversion plan has not been defined.

Pb-Free (RoHS): TI's terms "Lead-Free" or "Pb-Free" mean semiconductor products that are compatible with the current RoHS requirements for all 6 substances, including the requirement that lead not exceed 0.1% by weight in homogeneous materials. Where designed to be soldered at high temperatures, TI Pb-Free products are suitable for use in specified lead-free processes.
Pb-Free (RoHS Exempt): This component has a RoHS exemption for either 1) lead-based flip-chip solder bumps used between the die and package, or 2) lead-based die adhesive used between the die and leadframe. The component is otherwise considered Pb-Free (RoHS compatible) as defined above.
Green (RoHS & no Sb/Br): TI defines "Green" to mean Pb-Free (RoHS compatible), and free of Bromine (Br) and Antimony (Sb) based flame retardants (Br or Sb do not exceed 0.1% by weight in homogeneous material)

(3) MSL, Peak Temp. -- The Moisture Sensitivity Level rating according to the JEDEC industry standard classifications, and peak solder temperature.

Important Information and Disclaimer: The information provided on this page represents TI's knowledge and belief as of the date that it is provided. TI bases its knowledge and belief on information provided by third parties, and makes no representation or warranty as to the accuracy of such information. Efforts are underway to better integrate information from third parties. TI has taken and continues to take reasonable steps to provide representative and accurate information but may not have conducted destructive testing or chemical analysis on incoming materials and chemicals. TI and TI suppliers consider certain information to be proprietary, and thus CAS numbers and other limited information may not be available for release.

In no event shall TI's liability arising out of such information exceed the total purchase price of the TI part(s) at issue in this document sold by TI to Customer on an annual basis.

TAPE AND REEL INFORMATION

REEL DIMENSIONS

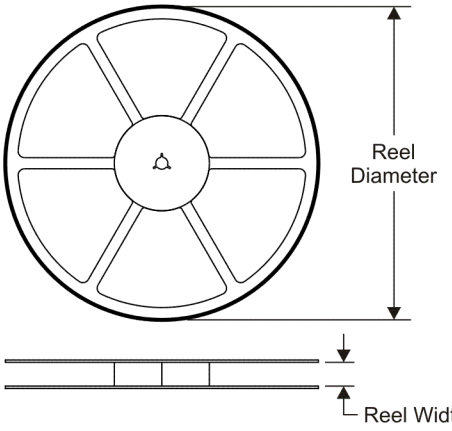

TAPE DIMENSIONS

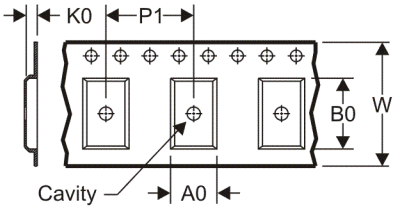

A0	Dimension designed to accommodate the component width
B0	Dimension designed to accommodate the component length
K0	Dimension designed to accommodate the component thickness
W	Overall width of the carrier tape
P1	Pitch between successive cavity centers

QUADRANT ASSIGNMENTS FOR PIN 1 ORIENTATION IN TAPE

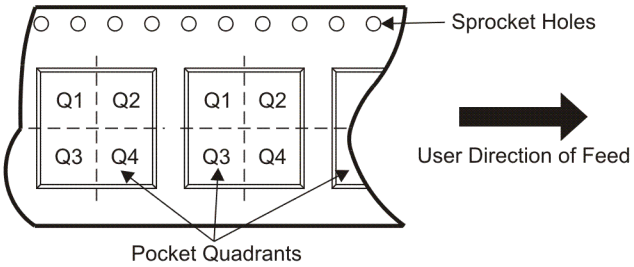

*All dimensions are nominal

Device	Package Type	Package Drawing	Pins	SPQ	Reel Diameter (mm)	Reel Width W1 (mm)	A0 (mm)	B0 (mm)	K0 (mm)	P1 (mm)	W (mm)	Pin1 Quadrant
TLV2760IDBVR	SOT-23	DBV	6	3000	180.0	9.0	3.15	3.2	1.4	4.0	8.0	Q3
TLV2760IDBVT	SOT-23	DBV	6	250	180.0	9.0	3.15	3.2	1.4	4.0	8.0	Q3
TLV2761IDBVR	SOT-23	DBV	5	3000	180.0	9.0	3.15	3.2	1.4	4.0	8.0	Q3
TLV2761IDBVT	SOT-23	DBV	5	250	180.0	9.0	3.15	3.2	1.4	4.0	8.0	Q3
TLV2762CDR	SOIC	D	8	2500	330.0	12.4	6.4	5.2	2.1	8.0	12.0	Q1
TLV2762IDGKR	MSOP	DGK	8	2500	330.0	12.4	5.3	3.4	1.4	8.0	12.0	Q1
TLV2762IDR	SOIC	D	8	2500	330.0	12.4	6.4	5.2	2.1	8.0	12.0	Q1
TLV2763CDR	SOIC	D	14	2500	330.0	16.4	6.5	9.0	2.1	8.0	16.0	Q1
TLV2763IDGSR	MSOP	DGS	10	2500	330.0	12.4	5.3	3.4	1.4	8.0	12.0	Q1
TLV2763IDR	SOIC	D	14	2500	330.0	16.4	6.5	9.0	2.1	8.0	16.0	Q1
TLV2764CDR	SOIC	D	14	2500	330.0	16.4	6.5	9.0	2.1	8.0	16.0	Q1
TLV2764IDR	SOIC	D	14	2500	330.0	16.4	6.5	9.0	2.1	8.0	16.0	Q1
TLV2764IPWR	TSSOP	PW	14	2000	330.0	12.4	6.9	5.6	1.6	8.0	12.0	Q1
TLV2765CDR	SOIC	D	16	2500	330.0	16.4	6.5	10.3	2.1	8.0	16.0	Q1
TLV2765IDR	SOIC	D	16	2500	330.0	16.4	6.5	10.3	2.1	8.0	16.0	Q1
TLV2765IPWR	TSSOP	PW	16	2000	330.0	12.4	6.9	5.6	1.6	8.0	12.0	Q1

TAPE AND REEL BOX DIMENSIONS

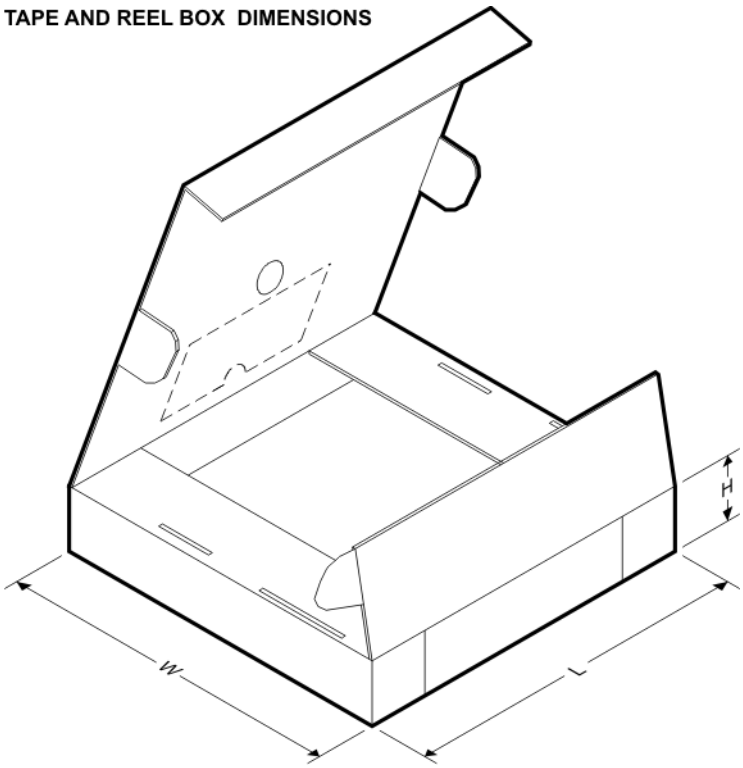

*All dimensions are nominal

Device	Package Type	Package Drawing	Pins	SPQ	Length (mm)	Width (mm)	Height (mm)
TLV2760IDBVR	SOT-23	DBV	6	3000	182.0	182.0	20.0
TLV2760IDBVT	SOT-23	DBV	6	250	182.0	182.0	20.0
TLV2761IDBVR	SOT-23	DBV	5	3000	182.0	182.0	20.0
TLV2761IDBVT	SOT-23	DBV	5	250	182.0	182.0	20.0
TLV2762CDR	SOIC	D	8	2500	340.5	338.1	20.6
TLV2762IDGKR	MSOP	DGK	8	2500	358.0	335.0	35.0
TLV2762IDR	SOIC	D	8	2500	340.5	338.1	20.6
TLV2763CDR	SOIC	D	14	2500	346.0	346.0	33.0
TLV2763IDGSR	MSOP	DGS	10	2500	358.0	335.0	35.0
TLV2763IDR	SOIC	D	14	2500	346.0	346.0	33.0
TLV2764CDR	SOIC	D	14	2500	333.2	345.9	28.6
TLV2764IDR	SOIC	D	14	2500	333.2	345.9	28.6
TLV2764IPWR	TSSOP	PW	14	2000	346.0	346.0	29.0
TLV2765CDR	SOIC	D	16	2500	333.2	345.9	28.6
TLV2765IDR	SOIC	D	16	2500	333.2	345.9	28.6
TLV2765IPWR	TSSOP	PW	16	2000	346.0	346.0	29.0

P (R–PDIP–T8) PLASTIC DUAL–IN–LINE PACKAGE

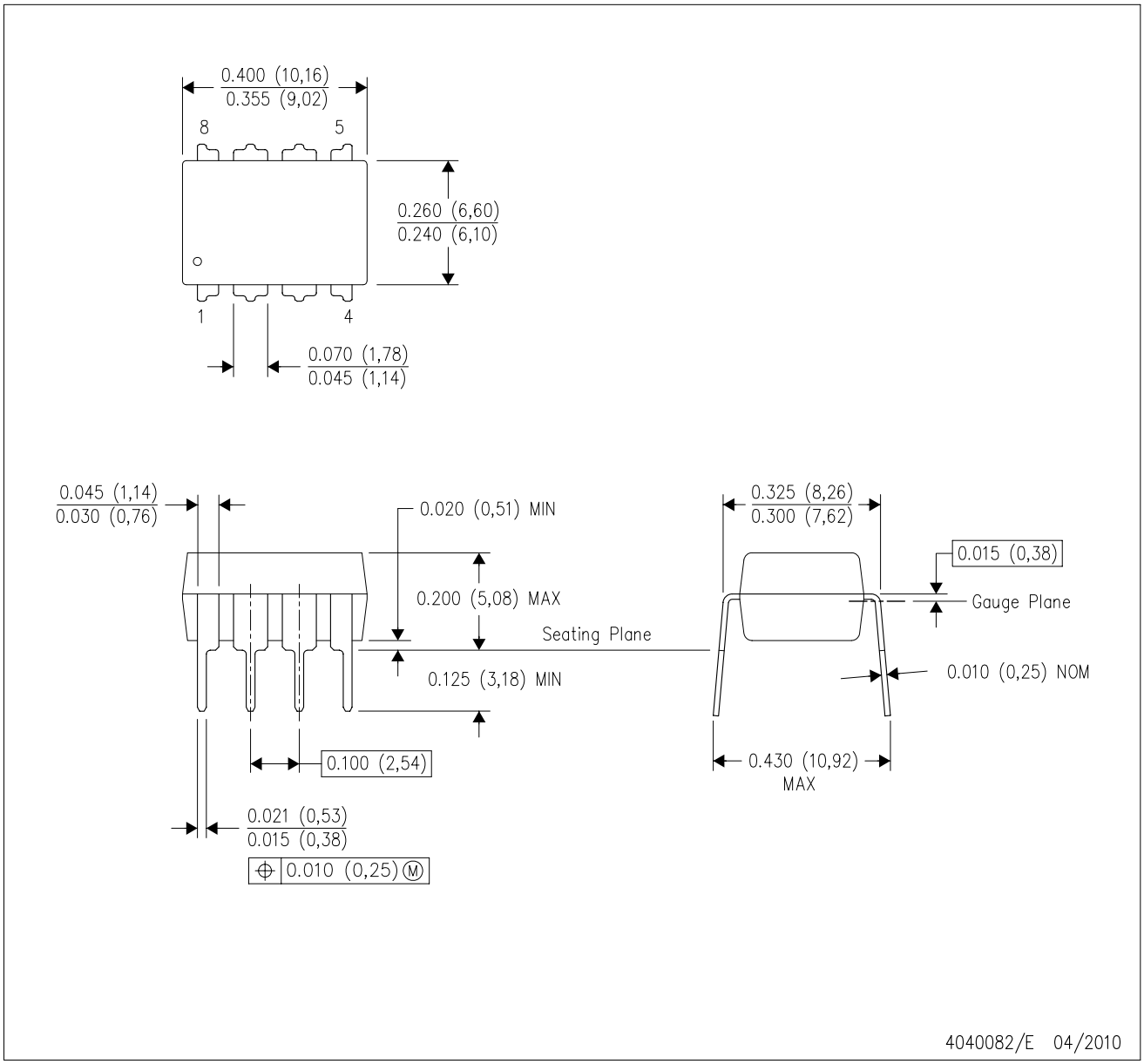

NOTES:
A. All linear dimensions are in inches (millimeters).
B. This drawing is subject to change without notice.
C. Falls within JEDEC MS–001 variation BA.

DBV (R–PDSO–G5) PLASTIC SMALL–OUTLINE PACKAGE

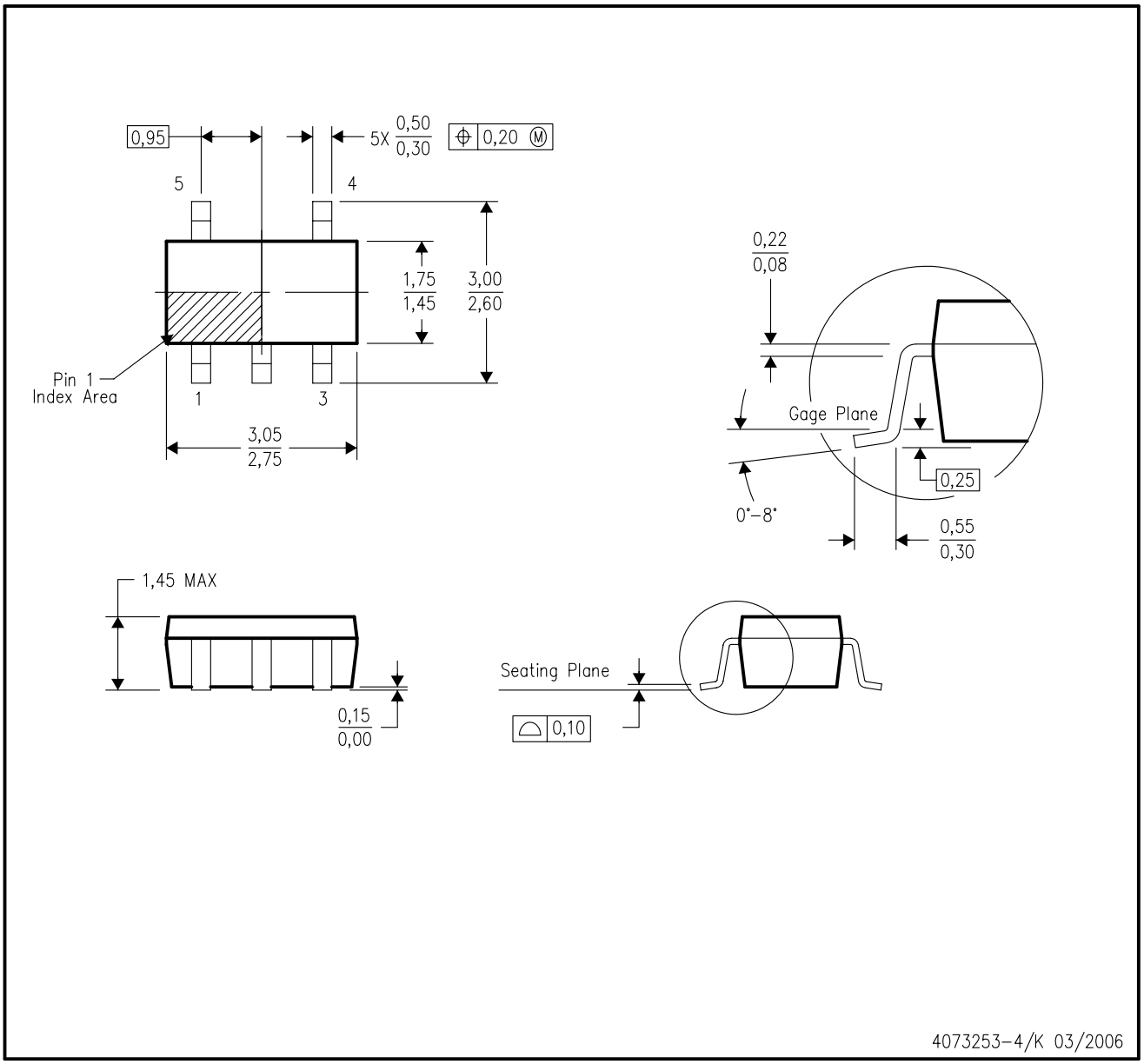

NOTES:
A. All linear dimensions are in millimeters.
B. This drawing is subject to change without notice.
C. Body dimensions do not include mold flash or protrusion. Mold flash and protrusion shall not exceed 0.15 per side.
D. Falls within JEDEC MO–178 Variation AA.

DBV (R-PDSO-G5)

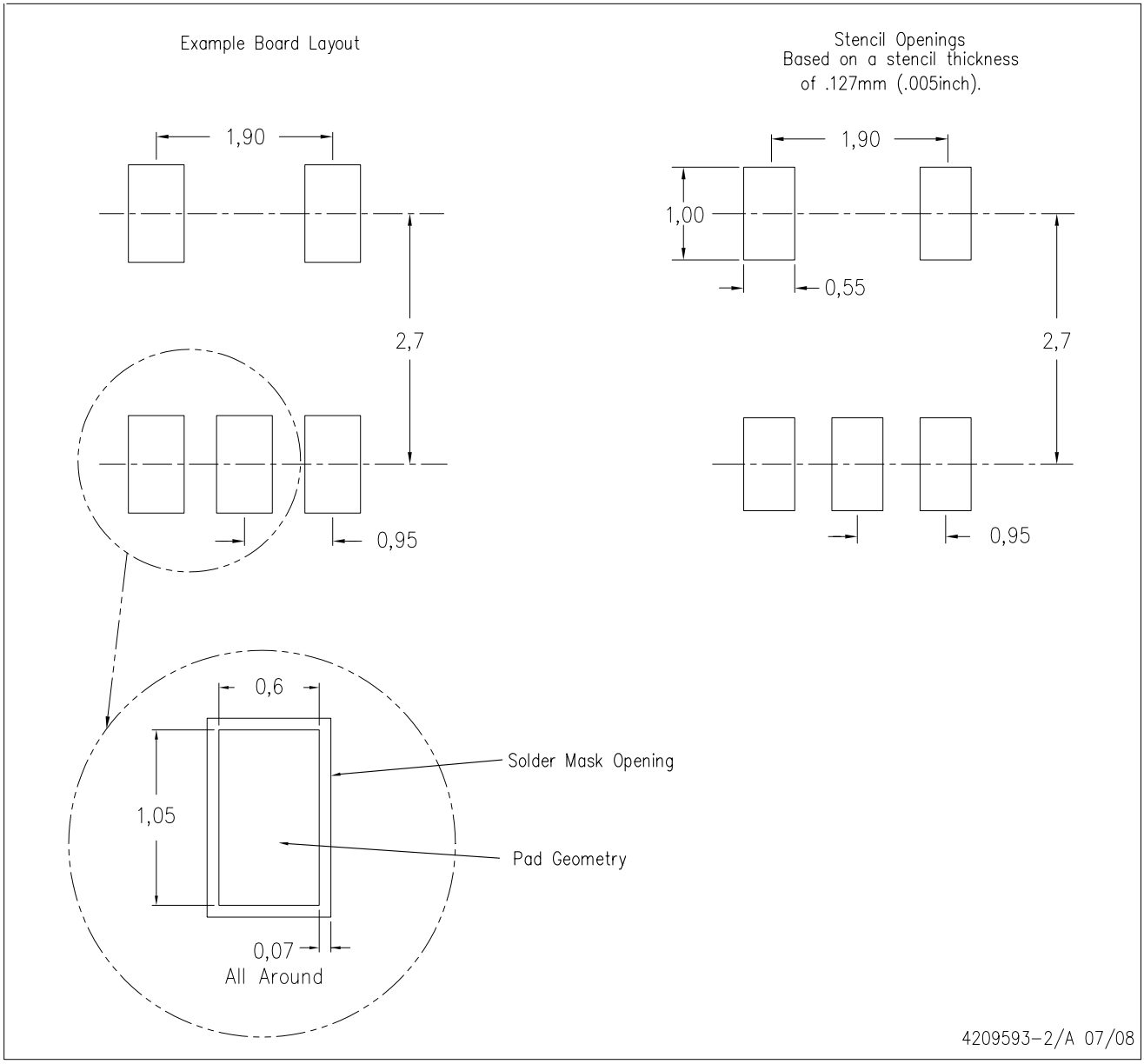

NOTES:
A. All linear dimensions are in millimeters.
B. This drawing is subject to change without notice.
C. Customers should place a note on the circuit board fabrication drawing not to alter the center solder mask defined pad.
D. Publication IPC-7351 is recommended for alternate designs.
E. Laser cutting apertures with trapezoidal walls and also rounding corners will offer better paste release. Customers should contact their board assembly site for stencil design recommendations. Example stencil design based on a 50% volumetric metal load solder paste. Refer to IPC-7525 for other stencil recommendations.

DBV (R–PDSO–G6) PLASTIC SMALL–OUTLINE PACKAGE

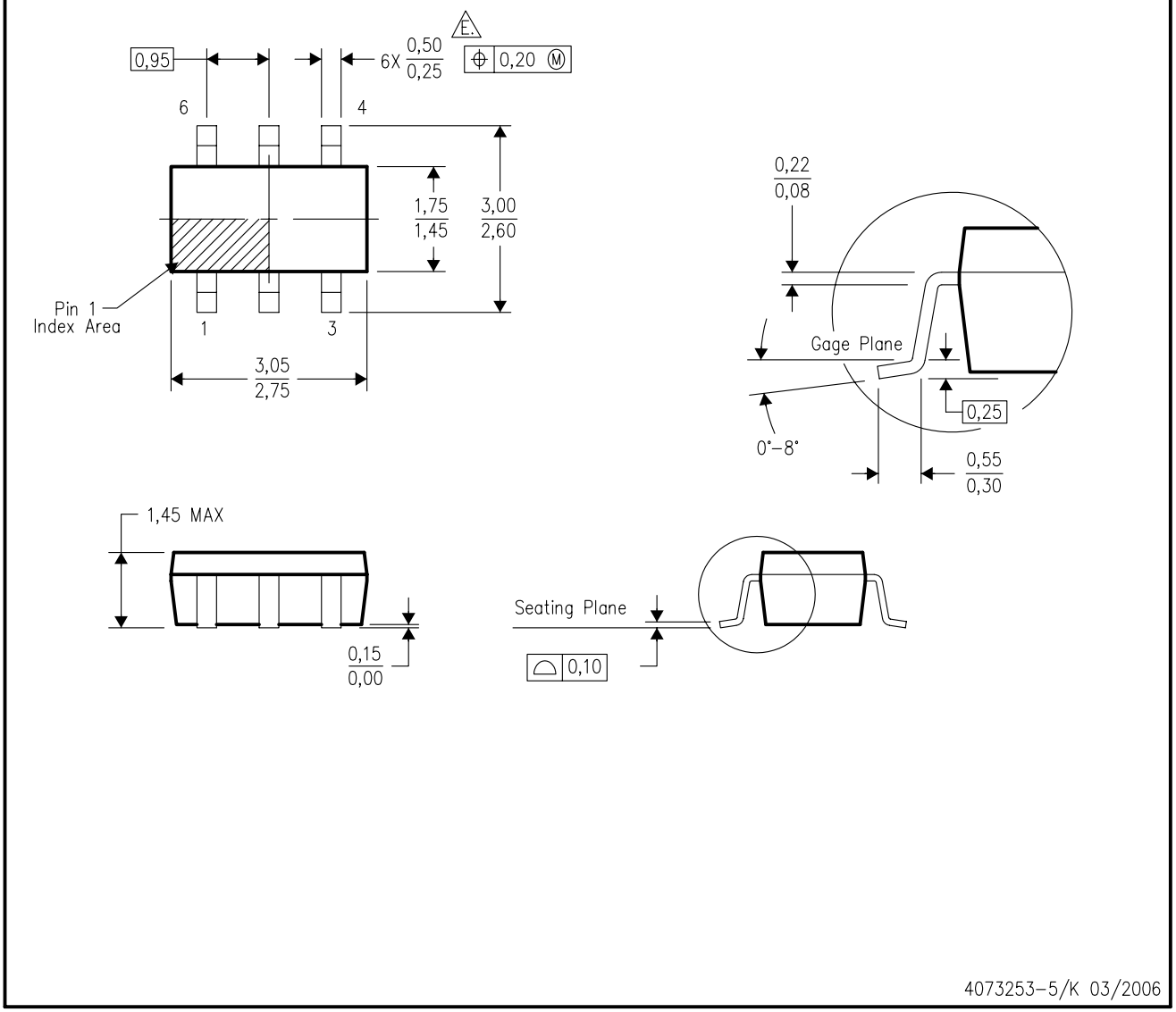

NOTES:
- A. All linear dimensions are in millimeters.
- B. This drawing is subject to change without notice.
- C. Body dimensions do not include mold flash or protrusion. Mold flash and protrusion shall not exceed 0.15 per side.
- D. Leads 1,2,3 may be wider than leads 4,5,6 for package orientation.
- E. Falls within JEDEC MO–178 Variation AB, except minimum lead width.

DBV (R-PDSO-G6)

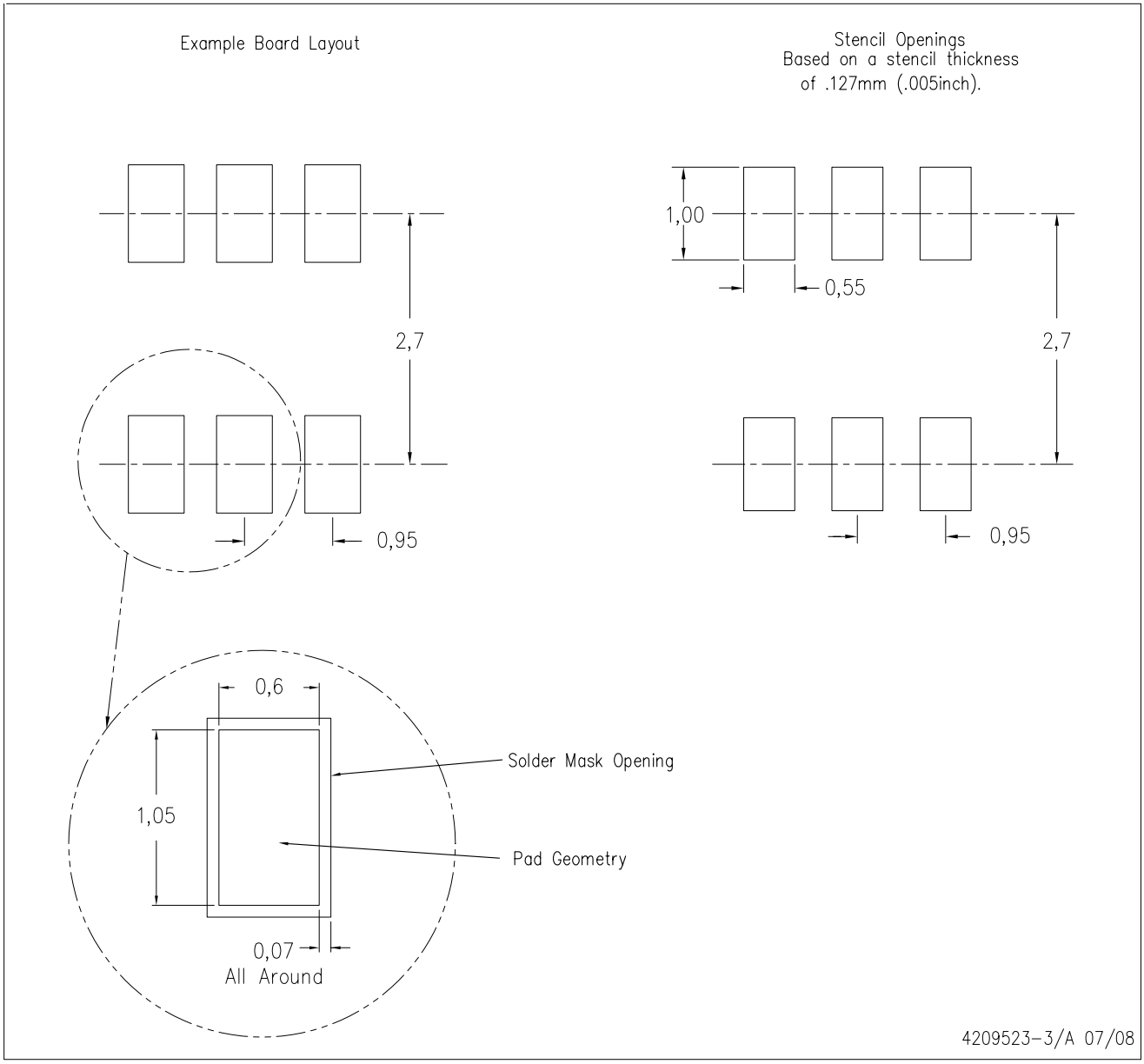

NOTES:
A. All linear dimensions are in millimeters.
B. This drawing is subject to change without notice.
C. Customers should place a note on the circuit board fabrication drawing not to alter the center solder mask defined pad.
D. Publication IPC-7351 is recommended for alternate designs.
E. Laser cutting apertures with trapezoidal walls and also rounding corners will offer better paste release. Customers should contact their board assembly site for stencil design recommendations. Example stencil design based on a 50% volumetric metal load solder paste. Refer to IPC-7525 for other stencil recommendations.

DGK (S–PDSO–G8) PLASTIC SMALL–OUTLINE PACKAGE

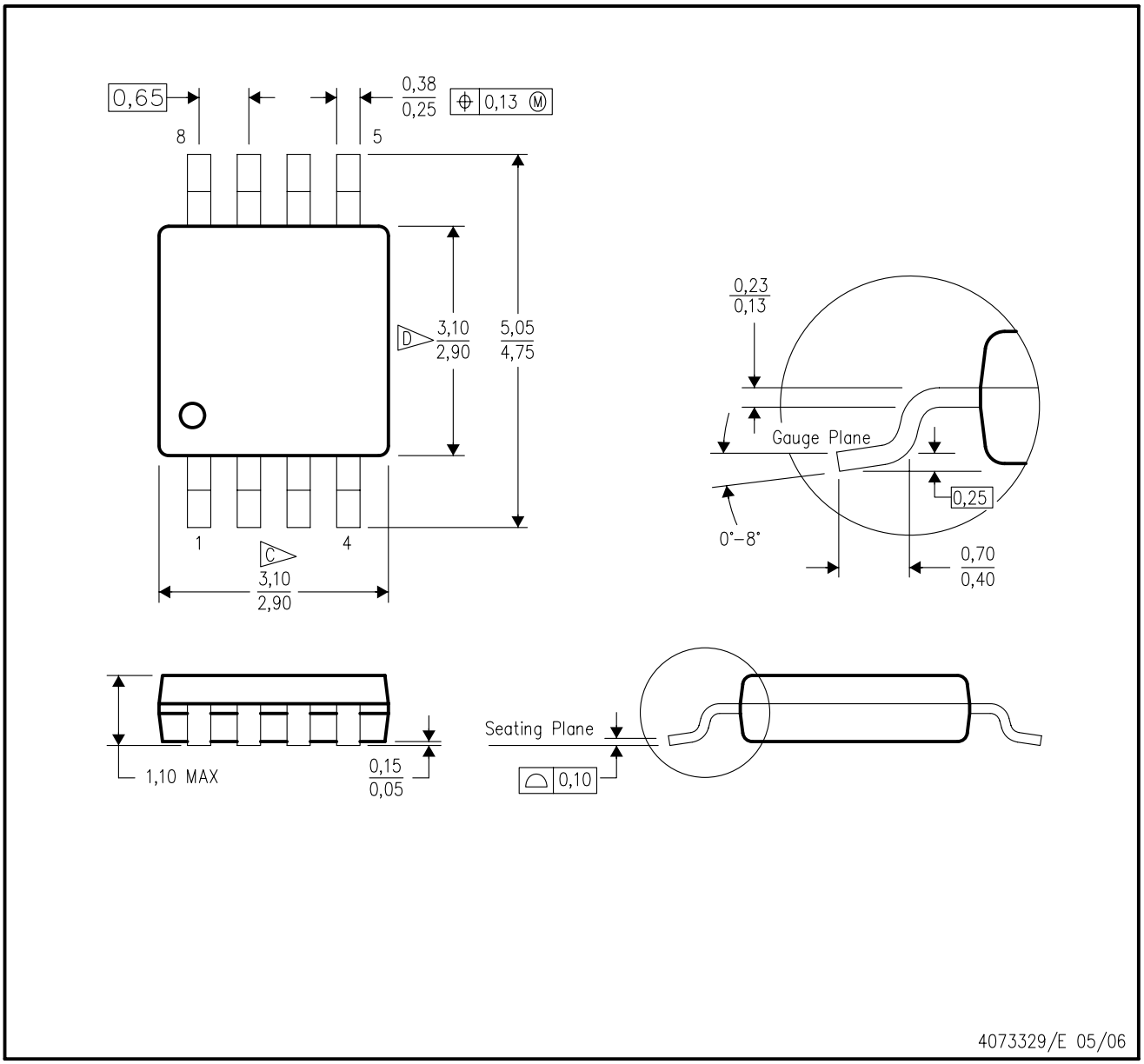

NOTES:
A. All linear dimensions are in millimeters.
B. This drawing is subject to change without notice.
C. Body length does not include mold flash, protrusions, or gate burrs. Mold flash, protrusions, or gate burrs shall not exceed 0.15 per end.
D. Body width does not include interlead flash. Interlead flash shall not exceed 0.50 per side.
E. Falls within JEDEC MO–187 variation AA, except interlead flash.

DGS (S–PDSO–G10) PLASTIC SMALL–OUTLINE PACKAGE

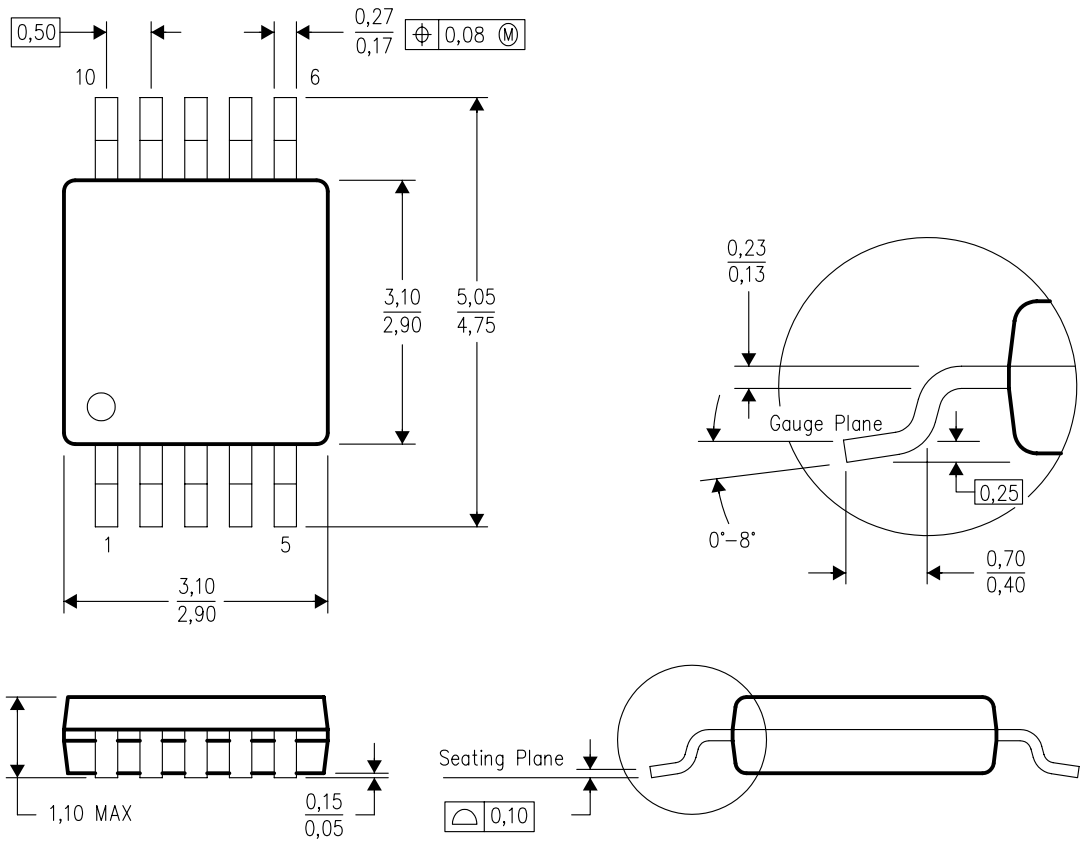

4073272/C 02/04

NOTES:
A. All linear dimensions are in millimeters.
B. This drawing is subject to change without notice.
C. Body dimensions do not include mold flash or protrusion.
D. Falls within JEDEC MO–187 variation BA.

D (R–PDSO–G14) PLASTIC SMALL OUTLINE

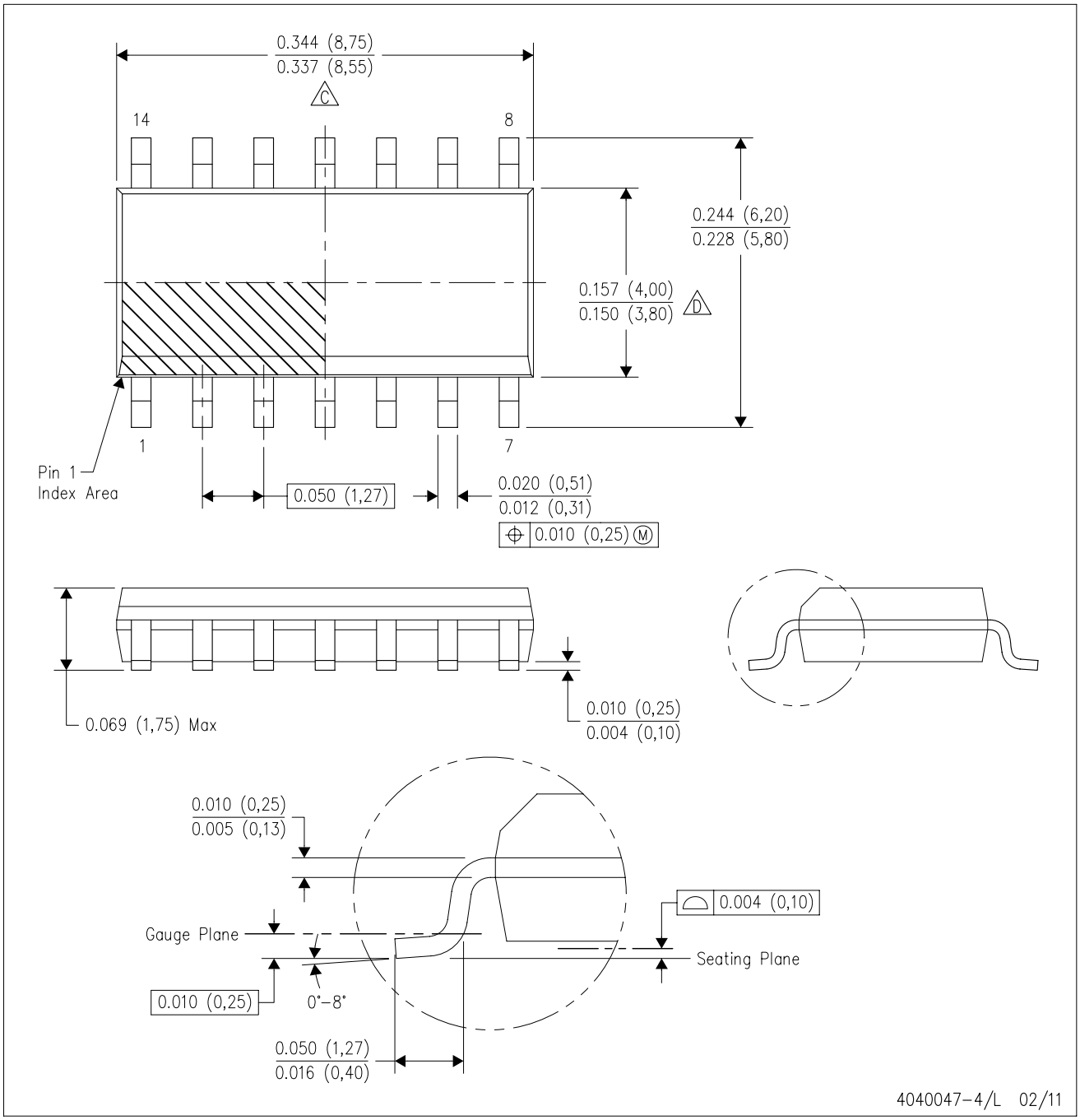

NOTES:
A. All linear dimensions are in inches (millimeters).
B. This drawing is subject to change without notice.
C. Body length does not include mold flash, protrusions, or gate burrs. Mold flash, protrusions, or gate burrs shall not exceed 0.006 (0,15) each side.
D. Body width does not include interlead flash. Interlead flash shall not exceed 0.017 (0,43) each side.
E. Reference JEDEC MS–012 variation AB.

D (R–PDSO–G14) PLASTIC SMALL OUTLINE

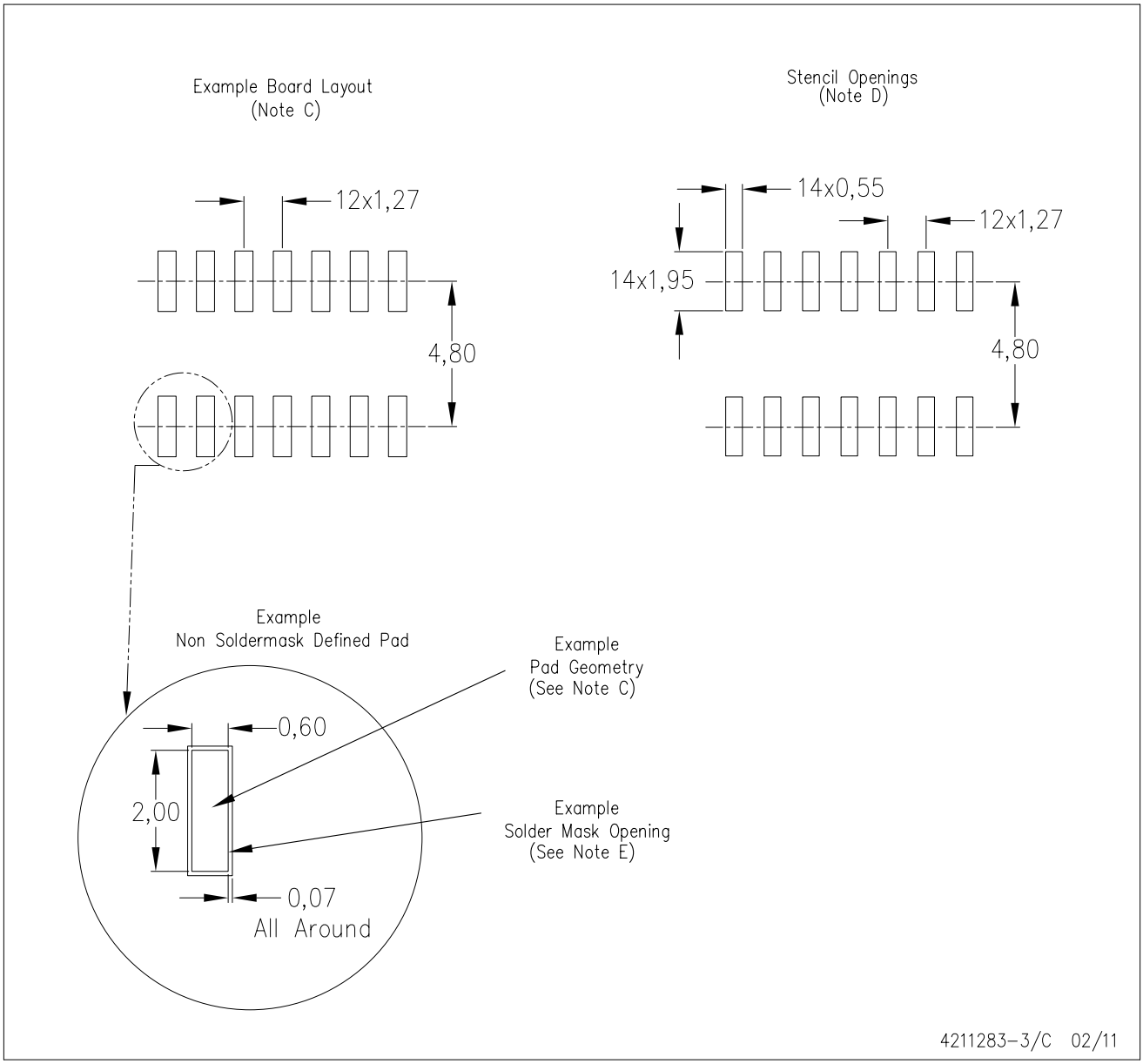

NOTES:
A. All linear dimensions are in millimeters.
B. This drawing is subject to change without notice.
C. Publication IPC–7351 is recommended for alternate designs.
D. Laser cutting apertures with trapezoidal walls and also rounding corners will offer better paste release. Customers should contact their board assembly site for stencil design recommendations. Refer to IPC–7525 for other stencil recommendations.
E. Customers should contact their board fabrication site for solder mask tolerances between and around signal pads.

D (R–PDSO–G16) PLASTIC SMALL OUTLINE

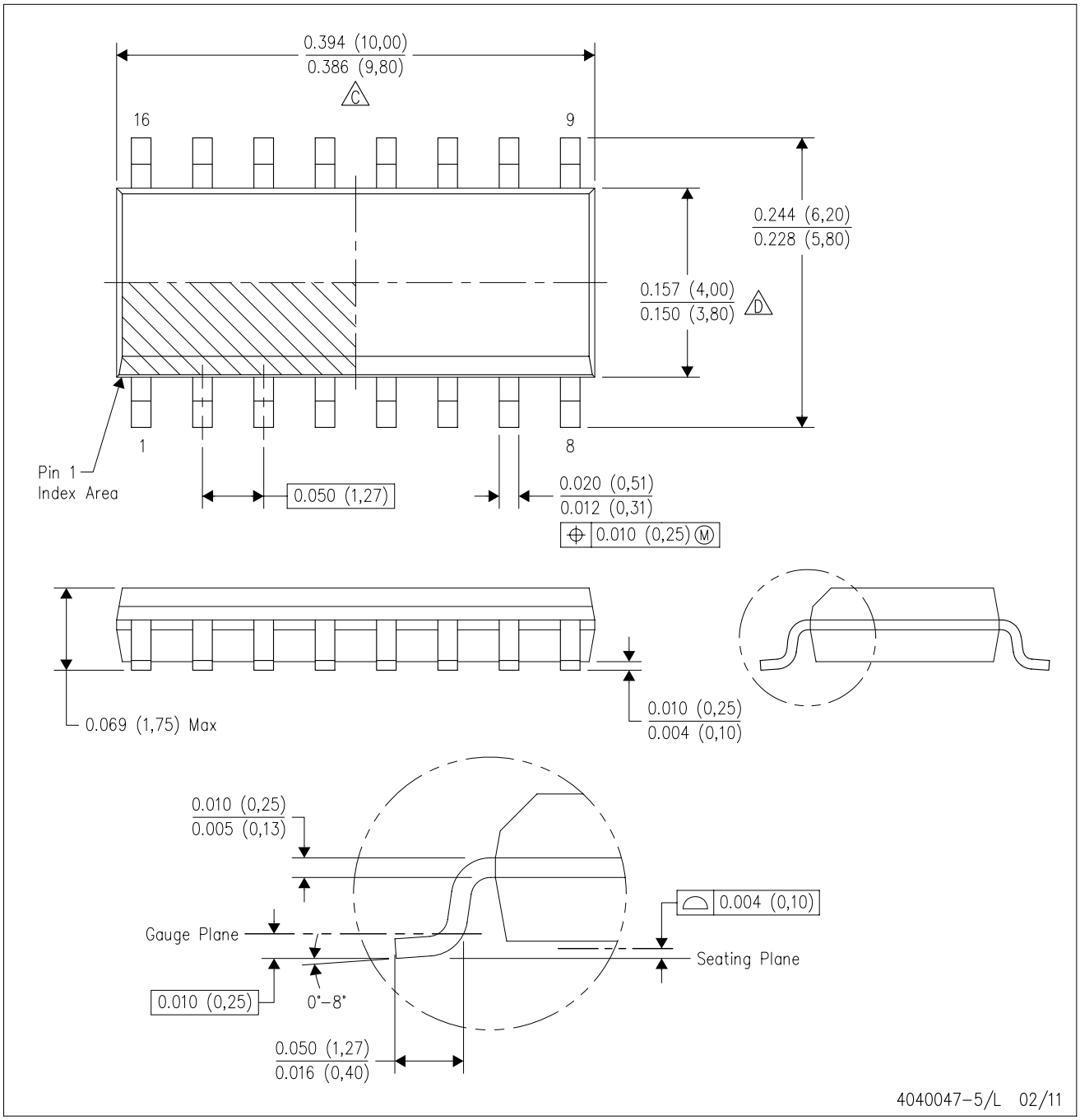

NOTES:
A. All linear dimensions are in inches (millimeters).
B. This drawing is subject to change without notice.
C. Body length does not include mold flash, protrusions, or gate burrs. Mold flash, protrusions, or gate burrs shall not exceed 0.006 (0,15) each side.
D. Body width does not include interlead flash. Interlead flash shall not exceed 0.017 (0,43) each side.
E. Reference JEDEC MS–012 variation AC.

D (R–PDSO–G16) PLASTIC SMALL OUTLINE

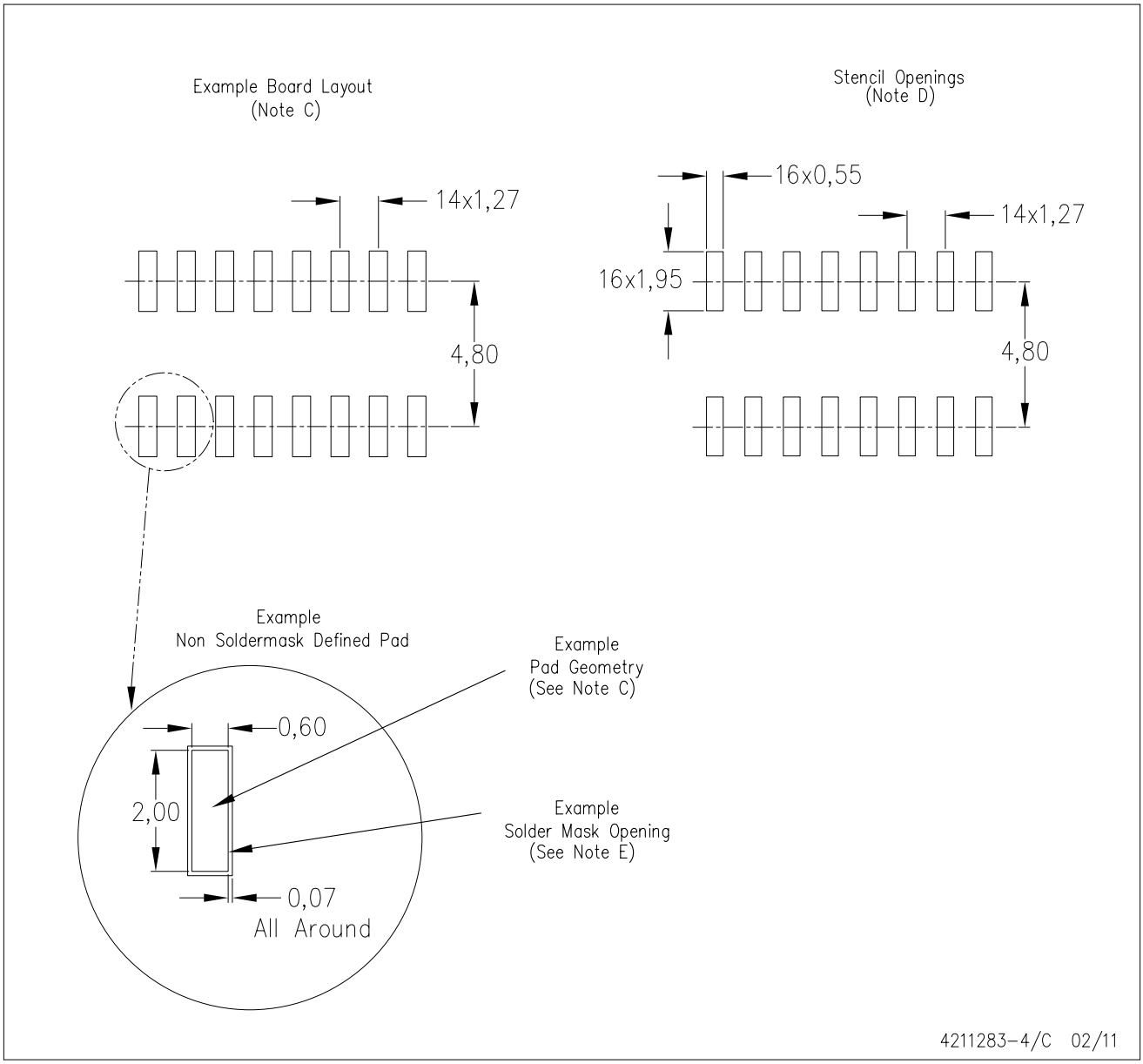

NOTES:
A. All linear dimensions are in millimeters.
B. This drawing is subject to change without notice.
C. Publication IPC–7351 is recommended for alternate designs.
D. Laser cutting apertures with trapezoidal walls and also rounding corners will offer better paste release. Customers should contact their board assembly site for stencil design recommendations. Refer to IPC–7525 for other stencil recommendations.
E. Customers should contact their board fabrication site for solder mask tolerances between and around signal pads.

PW (R–PDSO–G14) PLASTIC SMALL OUTLINE

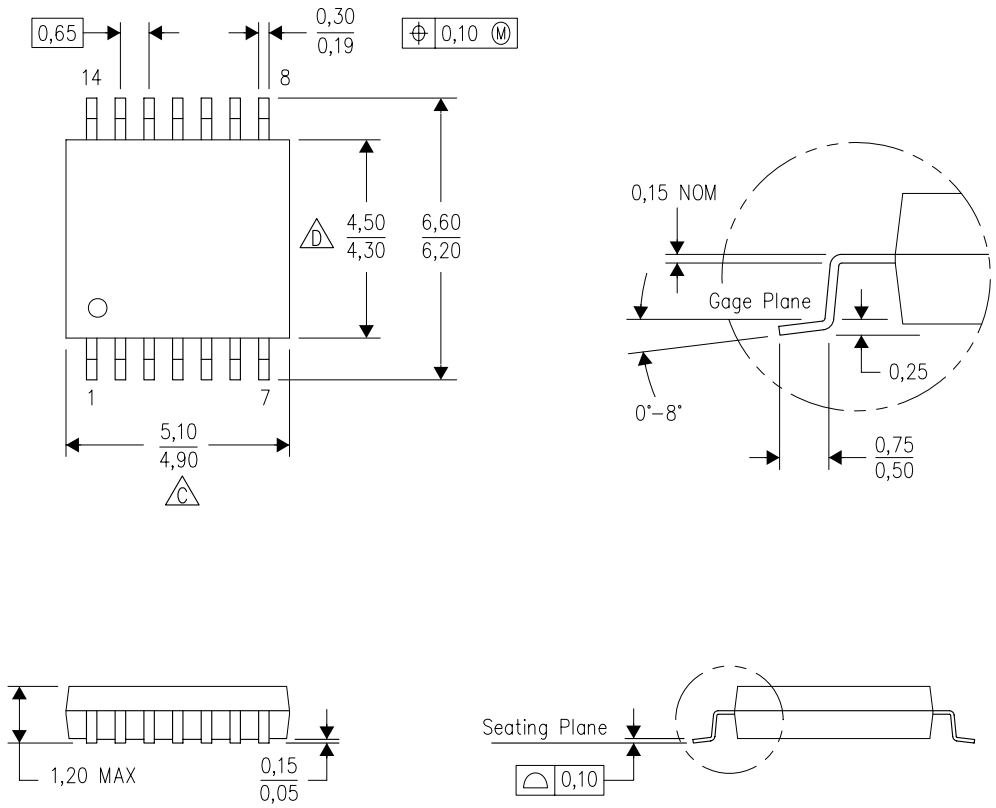

NOTES:
A. All linear dimensions are in millimeters. Dimensioning and tolerancing per ASME Y14.5M–1994.
B. This drawing is subject to change without notice.
C. Body length does not include mold flash, protrusions, or gate burrs. Mold flash, protrusions, or gate burrs shall not exceed 0,15 each side.
D. Body width does not include interlead flash. Interlead flash shall not exceed 0,25 each side.
E. Falls within JEDEC MO–153

PW (R–PDSO–G14) PLASTIC SMALL OUTLINE

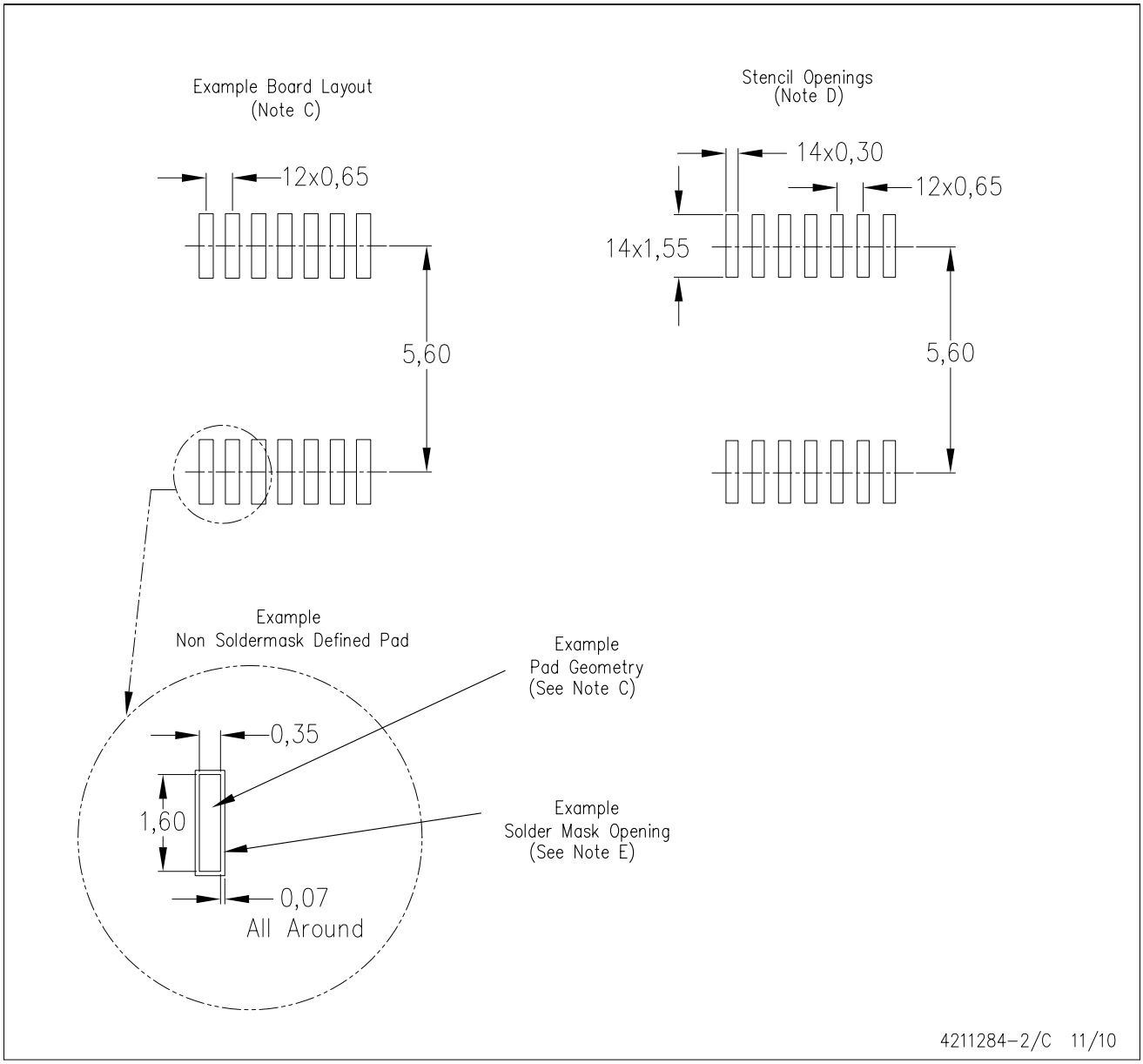

NOTES:
A. All linear dimensions are in millimeters.
B. This drawing is subject to change without notice.
C. Publication IPC–7351 is recommended for alternate designs.
D. Laser cutting apertures with trapezoidal walls and also rounding corners will offer better paste release. Customers should contact their board assembly site for stencil design recommendations. Refer to IPC–7525 for other stencil recommendations.
E. Customers should contact their board fabrication site for solder mask tolerances between and around signal pads.

PW (R–PDSO–G16) PLASTIC SMALL OUTLINE

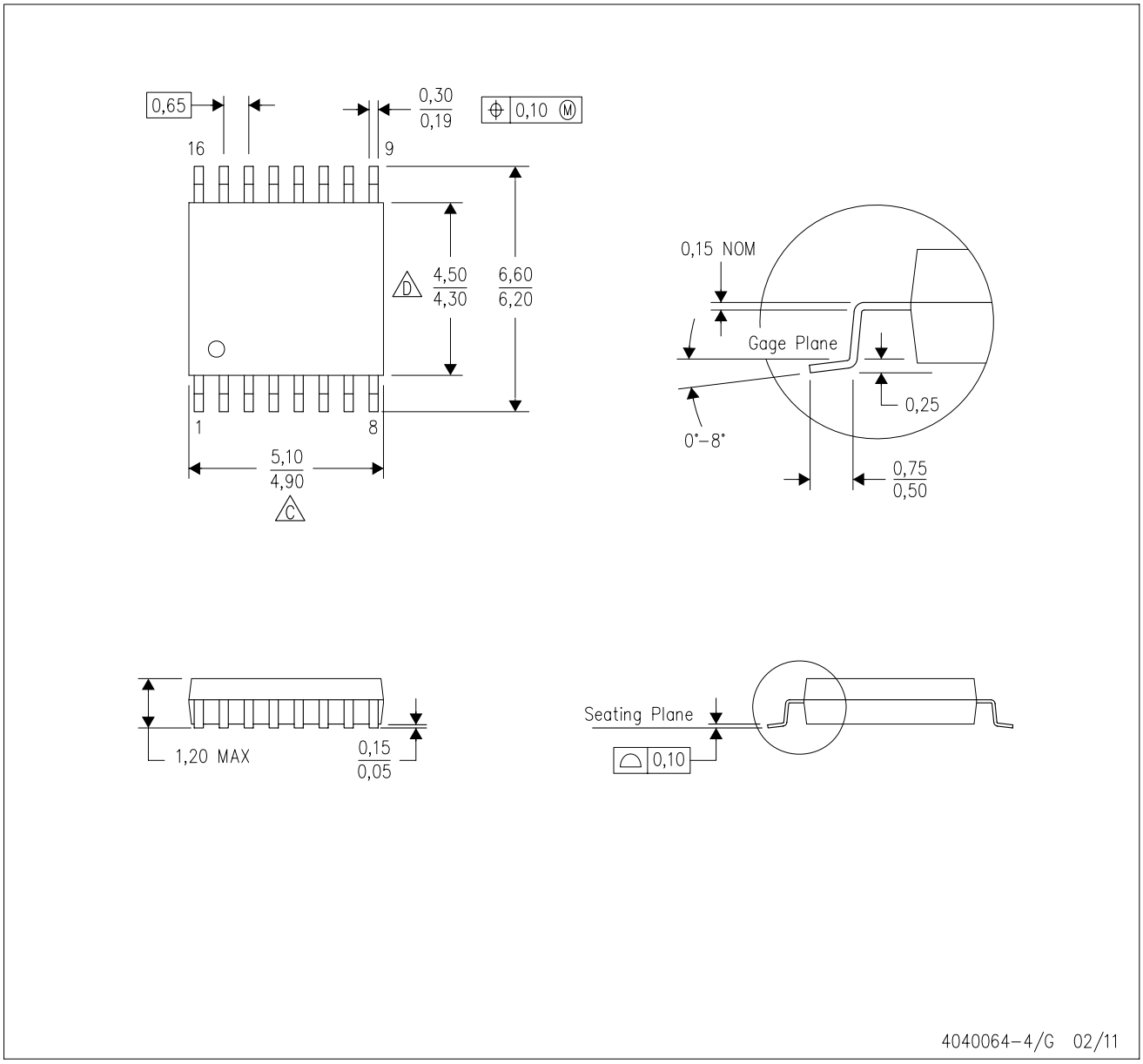

NOTES:
A. All linear dimensions are in millimeters. Dimensioning and tolerancing per ASME Y14.5M–1994.
B. This drawing is subject to change without notice.
C. Body length does not include mold flash, protrusions, or gate burrs. Mold flash, protrusions, or gate burrs shall not exceed 0,15 each side.
D. Body width does not include interlead flash. Interlead flash shall not exceed 0,25 each side.
E. Falls within JEDEC MO–153

PW (R–PDSO–G16) PLASTIC SMALL OUTLINE

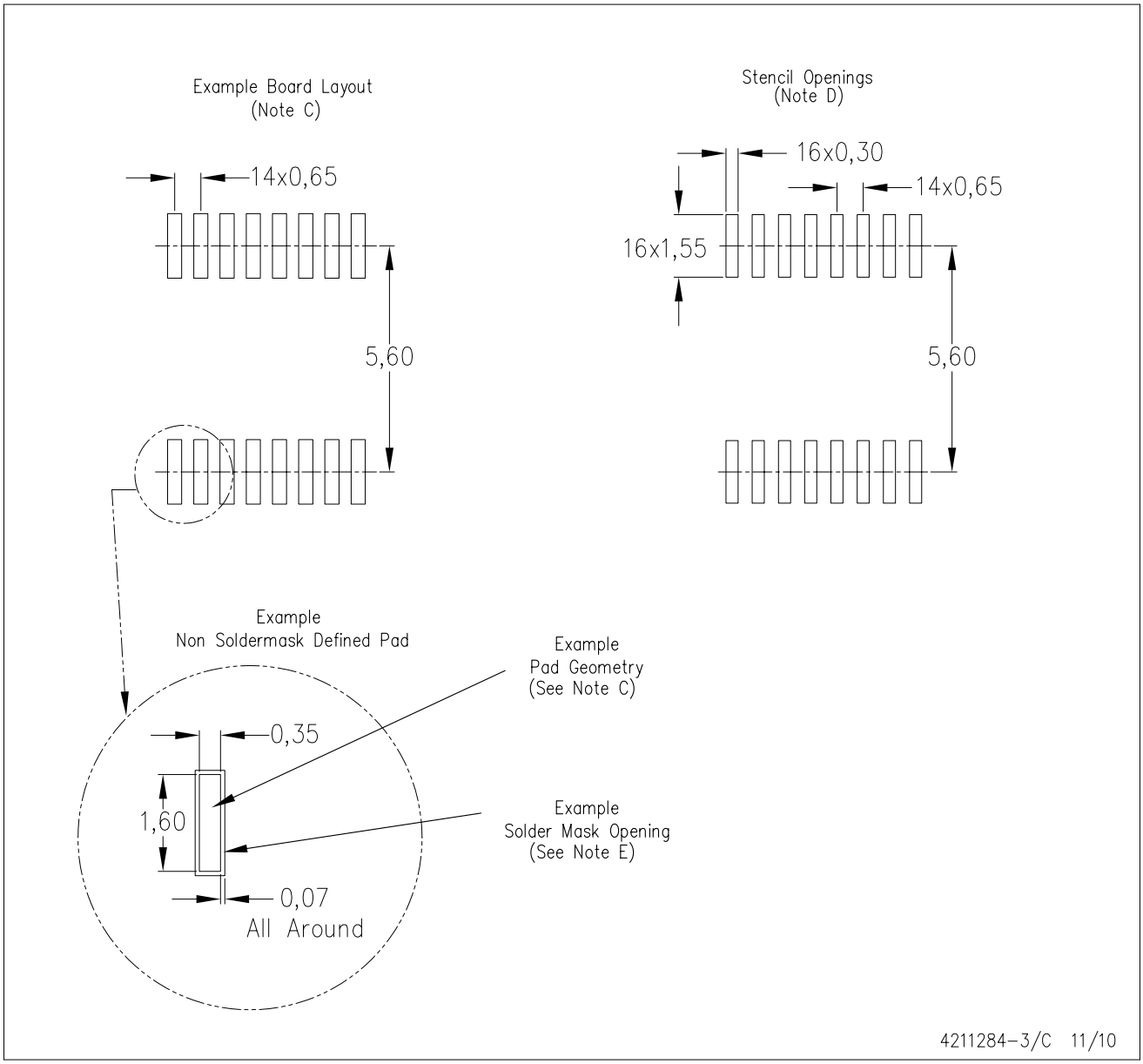

NOTES:
A. All linear dimensions are in millimeters.
B. This drawing is subject to change without notice.
C. Publication IPC–7351 is recommended for alternate designs.
D. Laser cutting apertures with trapezoidal walls and also rounding corners will offer better paste release. Customers should contact their board assembly site for stencil design recommendations. Refer to IPC–7525 for other stencil recommendations.
E. Customers should contact their board fabrication site for solder mask tolerances between and around signal pads.

D (R–PDSO–G8) PLASTIC SMALL OUTLINE

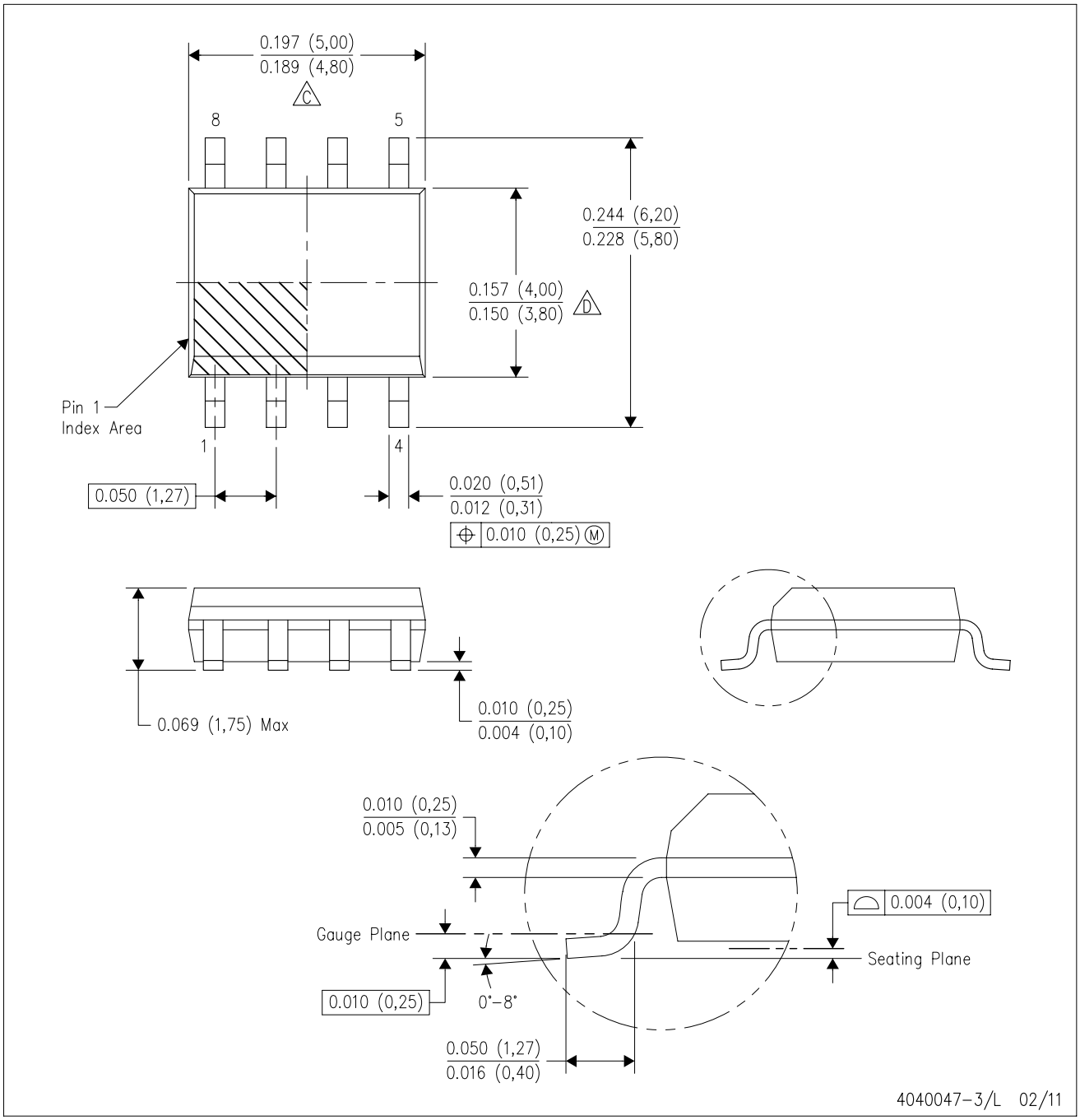

NOTES:
A. All linear dimensions are in inches (millimeters).
B. This drawing is subject to change without notice.
C. Body length does not include mold flash, protrusions, or gate burrs. Mold flash, protrusions, or gate burrs shall not exceed 0.006 (0,15) each side.
D. Body width does not include interlead flash. Interlead flash shall not exceed 0.017 (0,43) each side.
E. Reference JEDEC MS–012 variation AA.

D (R–PDSO–G8) PLASTIC SMALL OUTLINE

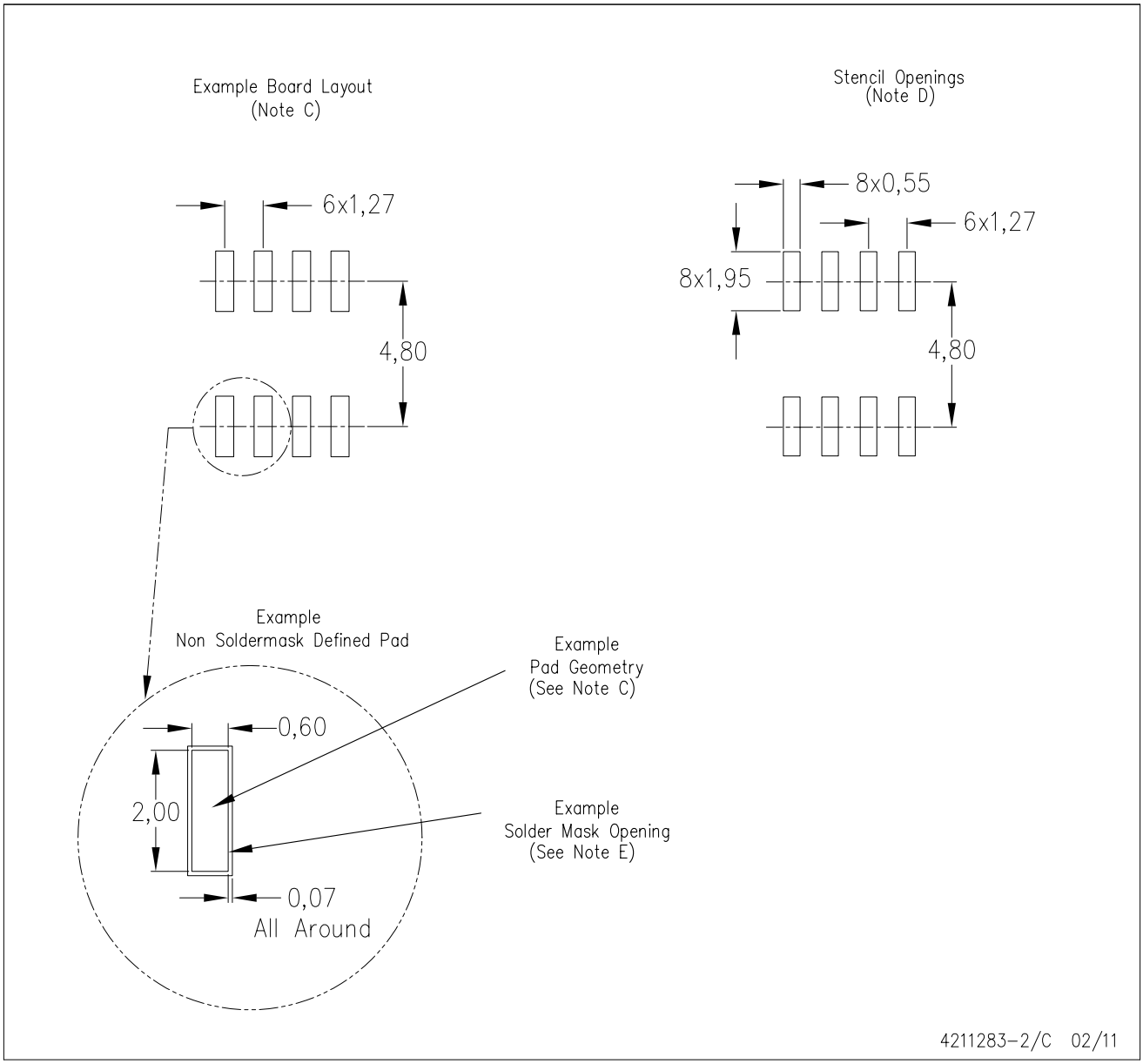

NOTES:
A. All linear dimensions are in millimeters.
B. This drawing is subject to change without notice.
C. Publication IPC–7351 is recommended for alternate designs.
D. Laser cutting apertures with trapezoidal walls and also rounding corners will offer better paste release. Customers should contact their board assembly site for stencil design recommendations. Refer to IPC–7525 for other stencil recommendations.
E. Customers should contact their board fabrication site for solder mask tolerances between and around signal pads.

IMPORTANT NOTICE

Texas Instruments Incorporated and its subsidiaries (TI) reserve the right to make corrections, modifications, enhancements, improvements, and other changes to its products and services at any time and to discontinue any product or service without notice. Customers should obtain the latest relevant information before placing orders and should verify that such information is current and complete. All products are sold subject to TI's terms and conditions of sale supplied at the time of order acknowledgment.

TI warrants performance of its hardware products to the specifications applicable at the time of sale in accordance with TI's standard warranty. Testing and other quality control techniques are used to the extent TI deems necessary to support this warranty. Except where mandated by government requirements, testing of all parameters of each product is not necessarily performed.

TI assumes no liability for applications assistance or customer product design. Customers are responsible for their products and applications using TI components. To minimize the risks associated with customer products and applications, customers should provide adequate design and operating safeguards.

TI does not warrant or represent that any license, either express or implied, is granted under any TI patent right, copyright, mask work right, or other TI intellectual property right relating to any combination, machine, or process in which TI products or services are used. Information published by TI regarding third-party products or services does not constitute a license from TI to use such products or services or a warranty or endorsement thereof. Use of such information may require a license from a third party under the patents or other intellectual property of the third party, or a license from TI under the patents or other intellectual property of TI.

Reproduction of TI information in TI data books or data sheets is permissible only if reproduction is without alteration and is accompanied by all associated warranties, conditions, limitations, and notices. Reproduction of this information with alteration is an unfair and deceptive business practice. TI is not responsible or liable for such altered documentation. Information of third parties may be subject to additional restrictions.

Resale of TI products or services with statements different from or beyond the parameters stated by TI for that product or service voids all express and any implied warranties for the associated TI product or service and is an unfair and deceptive business practice. TI is not responsible or liable for any such statements.

TI products are not authorized for use in safety-critical applications (such as life support) where a failure of the TI product would reasonably be expected to cause severe personal injury or death, unless officers of the parties have executed an agreement specifically governing such use. Buyers represent that they have all necessary expertise in the safety and regulatory ramifications of their applications, and acknowledge and agree that they are solely responsible for all legal, regulatory and safety-related requirements concerning their products and any use of TI products in such safety-critical applications, notwithstanding any applications-related information or support that may be provided by TI. Further, Buyers must fully indemnify TI and its representatives against any damages arising out of the use of TI products in such safety-critical applications.

TI products are neither designed nor intended for use in military/aerospace applications or environments unless the TI products are specifically designated by TI as military-grade or "enhanced plastic." Only products designated by TI as military-grade meet military specifications. Buyers acknowledge and agree that any such use of TI products which TI has not designated as military-grade is solely at the Buyer's risk, and that they are solely responsible for compliance with all legal and regulatory requirements in connection with such use.

TI products are neither designed nor intended for use in automotive applications or environments unless the specific TI products are designated by TI as compliant with ISO/TS 16949 requirements. Buyers acknowledge and agree that, if they use any non-designated products in automotive applications, TI will not be responsible for any failure to meet such requirements.

Following are URLs where you can obtain information on other Texas Instruments products and application solutions:

Products		**Applications**	
Audio	www.ti.com/audio	Communications and Telecom	www.ti.com/communications
Amplifiers	amplifier.ti.com	Computers and Peripherals	www.ti.com/computers
Data Converters	dataconverter.ti.com	Consumer Electronics	www.ti.com/consumer-apps
DLP® Products	www.dlp.com	Energy and Lighting	www.ti.com/energy
DSP	dsp.ti.com	Industrial	www.ti.com/industrial
Clocks and Timers	www.ti.com/clocks	Medical	www.ti.com/medical
Interface	interface.ti.com	Security	www.ti.com/security
Logic	logic.ti.com	Space, Avionics and Defense	www.ti.com/space-avionics-defense
Power Mgmt	power.ti.com	Transportation and Automotive	www.ti.com/automotive
Microcontrollers	microcontroller.ti.com	Video and Imaging	www.ti.com/video
RFID	www.ti-rfid.com	Wireless	www.ti.com/wireless-apps
RF/IF and ZigBee® Solutions	www.ti.com/lprf		

TI E2E Community Home Page e2e.ti.com

Mailing Address: Texas Instruments, Post Office Box 655303, Dallas, Texas 75265
Copyright © 2011, Texas Instruments Incorporated